COMING SOON

TRACTOR SUPPLY CO

---- THE STUFF YOU NEED OUT HERE----

www.myTSCstore.com

Q4 2023 G+

US HIGHWAY 90
BOUTTE, LOUISIANA
70039

OWNER / DEVELOPER

MAINLAND RETAIL, LLC

1905 ACKLEN AVENUE
NASHVILLE, TENNESSEE 37212

OWNER'S REPRESENTATIVE
MARC MESSIER
mmessier@mainlandcompanies.com

TENANT

TRACTOR SUPPLY COMPANY

5401 VIRGINIA WAY
BRENTWOOD, TN 37027

PROJECT MANAGER
C.D. CAFFEY
512.430.0228

ARCHITECT

OXFORD ARCHITECTURE

2934 SIDCO DRIVE, SUITE 120
NASHVILLE, TN 37204

ARCHITECT OF RECORD
GLEN P. OXFORD, AIA
615.256.3455
glen@oxfordarchitecture.com

PROJECT MANAGER
LEE MORRISETTE
615.256.3455 x 12
lee@oxfordarchitecture.com

CIVIL ENGINEER

LINFIELD, HUNTER & JUNIUS, INC.

3608 18th STREET SUITE 200
METAIRIE, LOUISIANA 70002

PROJECT MANAGER
VINCENT J. LECO III, P.E.
504.833.5300
vleco@lhjuniius.com

STRUCTURAL ENGINEER

BENNETT & PLESS, INC.

565 MARRIOTT DRIVE, SUITE 300
NASHVILLE, TN 37214

ENGINEER OF RECORD
FRED WEIS, P.E.
615.450.0834
fweis@bennett-pless.com

PROJECT MANAGER
JARROD FINGER
615.450.1020
jfinger@bpl-enclosure.com

MECHANICAL AND PLUMBING

SCHELTON ENGINEERING

1163 WEST MAIN STREET
FRANKLIN, TN 37064

ENGINEER OF RECORD
GARY W. SCHELTON, P.E., LEEP AP
615.730.9111
gary@scheltonengineering.com

ELECTRICAL CONSULTANT

PARSONS ENGINEERING

4751 TROUSDALE DRIVE, SUITE 202
NASHVILLE, TN 37203

ENGINEER OF RECORD
RODNEY RUNIONS
615.386.9396
rrunions@parsonsengineering.com

PROJECT SUMMARY

TRACTOR SUPPLY COMPANY IS A RETAILER TARGETING THE HOBBY FARMER. ITEMS SOLD AT TSC INCLUDE CLOTHING, FENCING, HARDWARE, BIRD FEED AND EQUINE PRODUCTS.

GRAPHIC SYMBOLS

BENCH MARK

COLUMN LINE — 9

DOOR NUMBER — 9

DRAWING NO. — 16 DETAIL, SCALE: 3/4" = 1'-0"

INTERIOR ELEVATION INDICATOR — 2 / 1 A5.0

LARGE SCALE DETAIL — 6 A4.0

NORTH

REVISION MARKER — 1

REVISION

ROOM NAME — ROOM

ROOM NUMBER — 101

SECTION CUT — 2 A2.6

WALL TYPES

- CMU WALL
- METAL STUDS AND FINISH TO 6" ABOVE CEILING
- METAL STUDS AND FINISH EXTEND TO ROOF DECK
- WALL TO HAVE BATT INSULATION
- PET WASH WALL, SEE A5.1

*SEE A5.0 FOR WALL FINISH AND THICKNESS TYPES

ABBREVIATIONS

ABV:	ABOVE
ACT:	ACCOUSTICAL CEILING TILE
ADA:	AMERICANS WITH DISABILITIES ACT
ADJ:	ADJACENT
AFF:	ABOVE FINISH FLOOR
ALUM:	ALUMINUM
APPROX:	APPROXIMATE
BLDG:	BUILDING
BRG:	BEARING
BRK:	BRICK
BTM:	BOTTOM
CER:	CERAMIC
CJ:	CONTROL JOINT
CL:	CENTER LINE
CLG:	CEILING
CMU:	CONCRETE MASONRY UNIT
C.O.:	CASED OPENING
CO:	CLEANOUT
CONC:	CONCRETE
COOR:	CORRIDOR
CT:	CERAMIC TILE
D.F.:	DRINKING FOUNTAIN
DIA:	DIAMETER
DIM:	DIMENSION
DWG:	DRAWING
EIFS:	EXTERIOR INSULATION & FINISH SYSTEM
INSUL:	INSULATION
JAN:	JANITOR
MECH:	MECHANICAL
MFG:	MANUFACTURER
MH:	MANHOLE
MO:	MASONRY OPENING
EJ:	EXPANSION JOINT
FD:	FIRE DEPARTMENT
FFE:	FINISH FLOOR ELEVATION
FH:	FIRE HYDRANT
FIN:	FINISH
FLR:	FLOOR
FRP:	FIBERGLASS REINFORCED PANEL
FT:	FEET
FTG:	FOOTING
GALV:	GALVANIZED
GC:	GENERAL CONTRACTOR
GD:	GRADE
GYP	BD; GYPSUM BOARD
HC:	ACCESSIBLE
HGT:	HEIGHT
HM:	HOLLOW METAL
HT:	HEIGHT
HVAC:	HEATING, VENTILATING & AIR CONDITIONING
HWY:	HIGHWAY
MTD:	MOUNTED
OC:	ON CENTER
PL:	PROPERTY LINE
PLYWD:	PLYWOOD
PP:	POWER POLE
PR:	PAIR
PSI:	POUNDS PER SQUARE INCH
PT:	PAINT
PTD:	PAINTED
PVMT:	PAVEMENT
RAD:	RADIUS
RCP:	REFLECTED CEILING PLAN
REQ:	REQUIRED
ROW:	RIGHT OF WAY
SAN:	SANITARY
SCHED:	SCHEDULE
SPECS:	SPECIFICATIONS
SQ:	SQUARE
STD:	STANDARD
STRUCT:	STRUCTURAL
TRANS:	TRANSFORMER
VCT:	VINYL COMPOSITION TILE
VEST:	VESTIBULE
W/:	WITH
W/O:	WITHOUT
WD:	WOOD
WH:	WATER HEATER
WWF:	WELDED WIRE FABRIC
YD:	YARD

DRAWING INDEX

REVISION DATE: XX.XX.XXX
REVISION DATE: XX.XX.XXX
REVISION DATE: XX.XX.XXX
REVISION DATE: XX.XX.XXX
REVISION DATE: XX.XX.XXX
REVISION DATE: XX.XX.XXX

ISSUED FOR CONSTRUCTION
07.18.2024

COVER SHEET

CIVIL

ARCHITECTURAL

AS1.0	SITE PLAN
A0.0	TENANT CRITERIA & VENDOR INFORMATION
A0.1	DOOR & FINISH SCHEDULES
A0.2	ACCESSIBILITY STANDARDS
A1.0	ARCHITECTURAL FLOOR PLAN
A2.0	ARCHITECTURAL ELEVATIONS
A2.1	ARCHITECTURAL ELEVATIONS
A3.0	REFLECTED CEILING PLAN
A4.0	SECTIONS & DETAILS
A4.1	SECTIONS & DETAILS
A5.0	INTERIOR PLANS, ELEVATIONS, & DETAILS
A5.1	PET WASH PLAN, ELEVATIONS, & DETAILS
A5.2	INTERIOR ELEVATIONS
A6.0	SECTIONS, DETAILS, & ELEVATIONS
A6.1	RECEIVING / SERVICE COUNTER DETAILS
A7.0	ROOF PLAN
A7.1	ROOF SPECIFICATIONS
A8.0	LIFE SAFETY / FIXTURE PLAN

STRUCTURAL

S1.0	FOUNDATION PLAN
S2.0	ROOF FRAMING PLAN
S2.1	ROOF FRAMING PLAN CONT.
S3.0	DETAILS
S3.0	DETAILS
S3.0	DETAILS
S4.0	DETAILS
S4.1	DETAILS
S4.2	DETAILS
S5.0	GENERAL NOTES
S5.1	QUALITY ASSURANCE AND SPECIAL INSPECTIONS
S5.2	QUALITY ASSURANCE AND SPECIAL INSPECTIONS CONT.
S5.3	CONCRETE SPECIFICATIONS

MECHANICAL

M1.0	MECHANICAL FLOOR PLAN
M2.0	MECHANICAL SCHEDULES, DETAILS AND SPECIFICATIONS

PLUMBING

P1.0	PLUMBING FLOOR PLAN
P2.0	PLUMBING SCHEDULES AND DETAILS
P3.0	PLUMBING RISERS AND SPECIFICATIONS

FIRE PROTECTION

FP1.0	FIRE PROTECTION PLAN

ELECTRICAL

ES1.0	SITE ELECTRICAL PLAN
E1.0	GENERAL LIGHTING PLAN
E2.0	GENERAL POWER PLAN
E3.1	ELECTRICAL SYSTEM VENDOR DETAILS
E3.2	ELECTRICAL SYSTEM VENDOR DETAILS
E4.0	ELECTRICAL LEGENDS AND DETAILS
E5.0	SYSTEM FLOOR PLAN
E5.1	SYSTEM FLOOR NOTES

VICINITY MAP

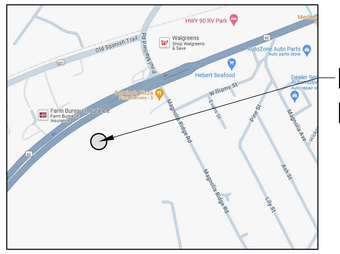

PROJECT DATA

THIS PROJECT IS BASED ON THE REQUIREMENTS OF THE LOUISIANA STATE UNIFORM CONSTRUCTION CODE WHICH IS BASED UPON THE FOLLOWING:

2021 INTERNATIONAL BUILDING CODE W/ LOCAL AMENDMENTS)
2021 INTERNATIONAL PLUMBING CODE (ADOPTS WITH AMENDMENTS IPC 2015)
2021 INTERNATIONAL MECHANICAL CODE (ADOPTS WITH AMENDMENTS IMC 2015)
2021 INTERNATIONAL FUEL AND GAS CODE
2020 NATIONAL ELECTRIC CODE
2021 INTERNATIONAL ENERGY CONSERVATION CODE

OCCUPANCY CLASSIFICATION	M / S-1 - NON-SEPARATED MIXED USE
CONSTRUCTION TYPE	IIIB
FIRE SUPRESSION	SPRINKLERED

BUILDING AREA UNITS			OCCUPANCY LOAD
RETAIL SALES	=	15,416 SQ. FT. / 60	= 256.9 OR 257
OFFICE CORE & WALLS	=	1,341 SQ. FT. / 150	= 8.94 OR 9
STOCKROOM	=	2,895 SQ. FT. / 300	= 9.65 OR 10
FEED CENTER	=	2,050 SQ. FT. / 300	= 6.83 OR 7
TOTAL BUILDING AREA	=	21,702 SQ. FT.	
TOTAL OCCUPANT LOAD	=		= 283

BUILDING HEIGHT: 1 STORY - 21'-4" A.F.F. @ FRONT MASONRY WALL, 30'-8" @ GABLE FACADE

ALLOWABLE AREA CALCULATIONS:
Aa = At + [At x If] + [At x Is]
Aa = 12,500 + [12,500 x 0] + [12,500 x 3]
Aa = 12,500 + [0] + [37,500]
Aa = 50,000 SQ. FT.
Aa = 50,000 SQ. FT. > 21,702 SQ. FT.

2428 - TSC - Q4 2023 BOUTTE, LOUISIANA

BOUTTE, LOUISIANA

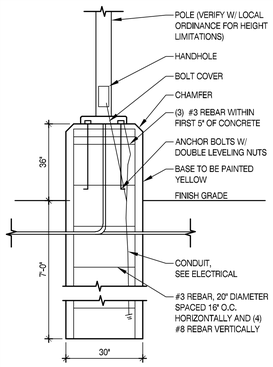

3 DETAIL
SCALE: 1/2" = 1'-0"
TYPICAL POLE LIGHT BASE

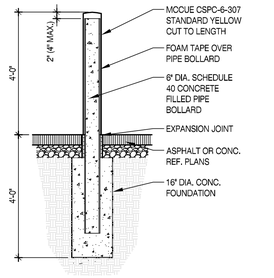

4 DETAIL
SCALE: 1/2" = 1'-0"
TYPICAL BOLLARD

TSC ID AND SIGN DESCRIPTION	MOUNTING LOCATION	SUGGESTED MOUNTING METHOD
G6 - POLE SIGN: FEED, FENCING & MORE (18" X 24")	RIGHT SIDE OF FEED ROOM OVERHEAD DOOR	ON 2.5" DIA. GALVANIZED METAL POLE USING U-BOLTS
G7 - POLE SIGN: EXIT SIGN (18" X 24")	LEFT SIDE OF REAR DRIVE THRU FENCE GATE	ON 2.5" DIA. GALVANIZED METAL POLE USING U-BOLTS
TFS - GATE SIGN: THANKS FOR SHOPPING (39" X 21")	ON FRONT SIDE OF REAR DRIVE THRU FENCE GATE	YUNIKER WILL SEND A UHOOK FOR INSTALLATION

*CONTRACTOR TO INSTALL SIDE LOT POLE SIGNAGE ON MCCUE MOBILE PARKING SIGNS. CONFIRM EXACT LOCATION WITH FINAL FIXTURE PLAN.

5 DETAIL
NOT TO SCALE
FOD SIGNAGE

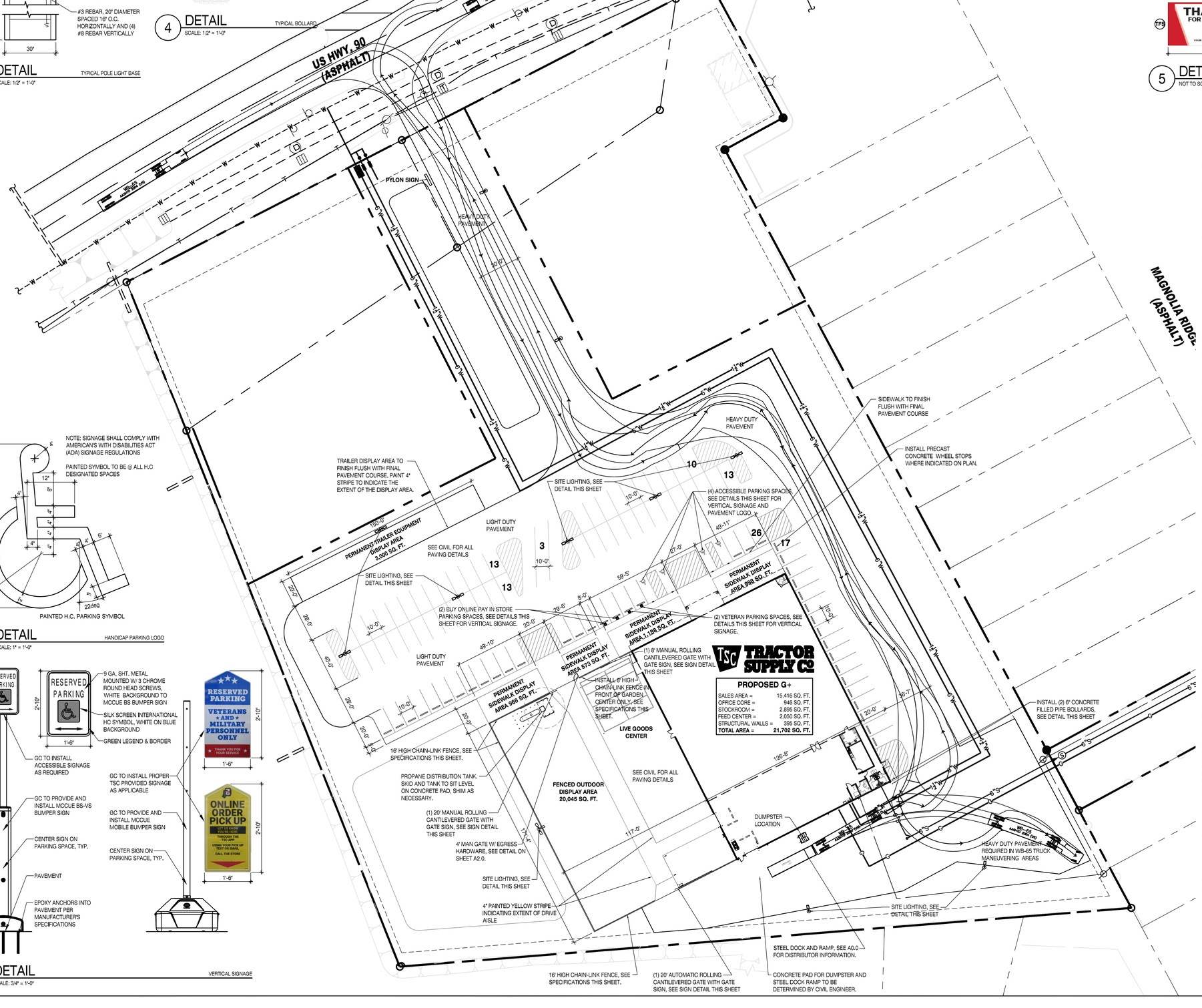

TRACTOR SUPPLY CO

PROPOSED G+

SALES AREA =	15,416 SQ. FT.
OFFICE CORE =	946 SQ. FT.
STOCKROOM =	2,895 SQ. FT.
FEED CENTER =	2,050 SQ. FT.
STRUCTURAL WALLS =	395 SQ. FT.
TOTAL AREA =	**21,702 SQ. FT.**

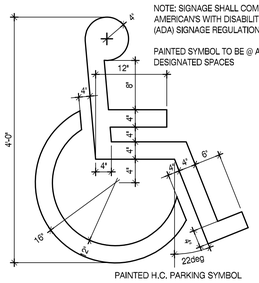

2 DETAIL
SCALE: 1" = 1'-0"
HANDICAP PARKING LOGO

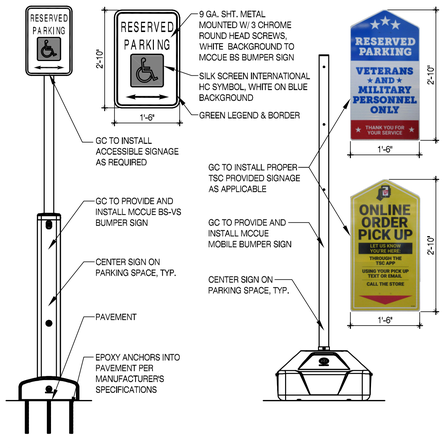

1 DETAIL
SCALE: 3/4" = 1'-0"
VERTICAL SIGNAGE

SITE STRIPING GUIDELINES:
1. STRIPING ON CONCRETE TO BE YELLOW.
2. STRIPING ON ASPHALT TO BE WHITE.

FENCED OUTDOOR DISPLAY AREA FIXTURE INSTALLATION GUIDELINES:
1. CONTRACTOR TO VERIFY WITH THE STORE MANAGER THAT ALL RACKS ARE PROPERLY BUILT AND POSITIONED.
2. DRILL HOLES FOR ANCHORING RACK. GENERALLY THE HOLE IN THE FOOT OF THE RACK IS 1/2" IN DIAMETER. HOWEVER, THIS MAY VARY. GENERAL CONTRACTOR IS TO DETERMINE IN THE FIELD THE MOST APPROPRIATE SIZE REQUIRED TO ANCHOR RACKS.
3. RACKS ARE TO BE SECURELY ANCHORED W/ ANCHOR BOLTS IN EVERY AVAILABLE HOLE.
4. FOLLOWING INSTALLATION, REMOVE ANY RESIDUAL DEBRIS AND CLEAN AREA.

PARKING LOT PAINT SPECIFICATIONS - 15 MIL APPLICATION (0.015 INCH THICKNESS) :
1. NEW PAVEMENT SURFACE TO CURE FOR A PERIOD OF NOT LESS THAN 14 DAYS BEFORE APPLICATION OF MARKING MATERIALS.
2. REMOVE ALL DIRT, GRAVEL, DEBRIS, VEGETATION, OR OTHER MISCELLANEOUS OBJECTS FROM THE SURFACE WITH A BROOM TRUCK OR EQUIVALENT RIGOROUS METHOD. PROVIDE A CLEAN, DUST-FREE AND COMPLETELY DRY SURFACE FOR PAINT APPLICATION. DO NOT APPLY PAINT OVER EXISTING TAPE MARKINGS.
3. CONFIRM & RECORD PROPER AIR AND SURFACE TEMPERATURES OF 55° AND RISING AND LESS THAN 95°. IF THE SURFACE TEMPERATURE IS NOT WITH THE TEMPERATURE RANGE OR IF THE PAINT APPLICATION IS DONE UNDER ADVERSE CONDITIONS (AS DETERMINED BY THE CONSTRUCTION PROJECT MANAGER) SUCH AS ABOVE 75% HUMIDITY, NIGHT STRIPING, ETC. IN ORDER TO MEET TSC OPENING SCHEDULE, CONTRACTOR TO RE-SCHEDULE AND COMPLETE SURFACE STRIPING UNDER PROPER CONDITIONS A MINIMUM OF 30 DAYS PRIOR TO THE EXPIRATION OF THE (1) ONE YEAR CONSTRUCTION WARRANTY.
4. PROVIDE A 15 MIL THICK 4" WIDE CONTINUOUS STRIPE WHERE INDICATED. MINIMUM OF (2) TWO COATS.
5. PROVIDE PRIMER AND SEALER TO BE APPLIED PER THE MANUFACTURER'S RECOMMENDATIONS ON ALL CONCRETE SURFACES AND ON ASPHALT SURFACES THAT ARE MORE THAN TWO YEARS OLD, OXIDIZED AND/OR HAVE AGGREGATE EXPOSED.

8' HIGH CHAIN LINK FENCE SPECIFICATIONS:
1. FABRIC: 96" 9 GA. GALVANIZED (2" MESH) CHAIN LINK FABRIC.
2. TOP & BOTTOM RAIL: 1 5/8" O.D. FULL WEIGHT PIPE, 2.27 LBS. PER FOOT (MIN). TOP RAIL TO BE JOINED WITH 1 5/8" SLEEVE. BOTTOM RAIL @ 18" ABV. GRADE.
3. LINE POST: 2 1/2" O.D. FULL WEIGHT PIPE, 3.65 LBS. PER FOOT (MIN). LINE POST TO BE SET 10' ON CENTER MAX. SPACING. CONCRETE FOOTING TO BE 8" DIA. BY 30" DEEP CONC.
4. TERMINAL POST: 3" O.D. FULL WEIGHT PIPE, 5.79 LBS. PER FOOT (MIN). SET IN 8" DIA. BY 36" DEEP CONC. FOOTING.
5. GATE POST: 4" O.D. FULL WEIGHT PIPE, 9.10 LBS. PER FOOT (MIN). 8" DIA. 36" DEEP CONC. FOOTING.
6. (4) GATES: (1) 8 FOOT MANUAL ROLLING CANTILEVERED CHAIN LINK GATE, (1) 20 FOOT MANUAL ROLLING CANTILEVERED CHAIN LINK GATE, (1) 20 FOOT AUTOMATIC ROLLING CANTILEVERED CHAIN LINK GATE WITH AUTOMATIC GATE OPERATOR, AND (1) 4 FOOT SWING GATE, WITH FRAMEWORK OF 1 5/8" FULL WEIGHT PIPE, 2.27 LBS. PER FOOT (MIN). GATES BRACED AND TRUSSED AS NECESSARY. SAME FABRIC AS FENCE. SEE PLAN FOR WIDTH.

6A. SWING GATES: DESIGN AS PER THE MANUFACTURERS DESIGN STANDARDS. GATES SHALL BE MANUALLY OPERATED.
7. TENSION WIRE: 7 GA. COIL SPRING GALVANIZED TENSION WIRE ATTACHED TO BOTTOM OF FENCE FABRIC WITH 9 GA. ALUM. HOG RING SPACED 24" ON CENTER.
8. FITTINGS: HEAVY BRACED BAND AND CARRIAGE BOLT, PRESSED STEEL RAIL-END, PRESSED STEEL LOOP CAP, PRESSED STEEL CAP, 1/4" X 3/4" TENSION BAR, HEAVY TENSION BAND AND CARRIAGE BOLT.
9. TIE WIRE: 8 1/4" 12 GA. STEEL TIE WIRE AND 6 1/2" 12 GA. STEEL WIRE SPACED 15" ON CENTER FOR LINE POST AND 24" ON CENTER FOR RAILS.
10. POST FOOTING: TRUCK POURED CONCRETE.
11. SWING GATE LATCH TO BE CHAIN LINK FENCE-LOC TM BY HOOVER FENCE CO. OR EQUAL.

16' HIGH CHAIN LINK FENCE SPECIFICATIONS:
1. FABRIC: 192" 9 GA. GALVANIZED (2" MESH) CHAIN LINK FABRIC.
2. TOP & BOTTOM RAIL: 1 5/8" O.D. FULL WEIGHT PIPE, 2.27 LBS. PER FOOT (MIN). TOP RAIL TO BE JOINED WITH 1 5/8" SLEEVE. BOTTOM RAIL @ 18" ABV. GRADE. THE MAXIMUM SPACING OF INTERMEDIATE HORIZONTAL RAILS TO BE 48" MAX.
3. LINE, GATE, AND TERMINAL POSTS: 4" O.D. x 1/4" WALL THICKNESS (MIN). LINE POST TO BE SET 10'-0" O.C. MAX. SPACING. CONCRETE FOOTING TO BE 12" DIA. X 60" DEEP CONC.
4. TENSION WIRE: 7 GA. COIL SPRING GALVANIZED TENSION WIRE ATTACHED TO BOTTOM OF FENCE FABRIC WITH 9 GA. ALUM. HOG RING SPACED 24" ON CENTER.
5. FITTINGS: HEAVY BRACED BAND AND CARRIAGE BOLT, PRESSED STEEL RAIL-END, PRESSED STEEL LOOP CAP, PRESSED STEEL CAP, 1/4" X 3/4" TENSION BAR, HEAVY TENSION BAND AND CARRIAGE BOLT.
6. TIE WIRE: 8 1/4" 12 GA. STEEL TIE WIRE AND 6 1/2" 12 GA. STEEL WIRE SPACED 15" ON CENTER FOR LINE POST AND 24" ON CENTER FOR RAILS.
7. POST FOOTING: TRUCK POURED CONCRETE.

LANDSCAPING NOTES:
LANDSCAPE AND IRRIGATION DESIGN PLANS ARE REQUIRED ON ALL PROJECTS. IF LANDSCAPING IS NOT REQUIRED CONTRACTOR SHALL PROVIDE SITE FINE GRADED W/ HYDRO SEEDING OR SOD IN ALL DISTURBED AREAS OUTSIDE OF PARKING FIELD. IN PARKING FIELD ISLANDS, IF ALLOWED USE WEED BARRIER & MULCH ONLY. ALL MULCHED AREAS TO RECEIVE WEED BARRIER. WHERE SEEDING WARRANTY DOES NOT PERMIT HYDRO SEED ALONE, PROVIDE STRAW AND BIODEGRADABLE NETTING OVER HYDRO SEED. TSC TO APPROVE LANDSCAPE CONCEPT PRIOR TO SUBMISSION TO CITY / TOWNSHIP. IRRIGATION SYSTEM TO BE DESIGN BUILD. SEE SHEET A0.0 FOR IRRIGATION MAP. ANY LANDSCAPE IN EXCESS OF 50 PLANTINGS TO RECEIVE IRRIGATION AS NEEDED REGARDLESS OF GEOGRAPHIC LOCATION. IRRIGATION HEADS TO BE A MINIMUM OF 3' FROM EDGE OF CURB LINE. ALL LANDSCAPE BEDS TO HAVE CUT EDGE OR COMMERCIAL EDGING MATERIAL INSTALLED FULLY SEPARATING THE MULCH BED FROM ADJACENT LAWN AREA. ANY TREES OVER 2" CALIPER MUST BE STAKED AND TIED.

GENERAL SITE NOTES:
1. VERIFY ALL UTILITY LOCATIONS ON SITE.
2. SEE CIVIL FOR ALL SITE WORK.

SITE PLAN
SCALE: 1" - 30'
BOUTTE, LOUISIANA
0 10' 20' 30 60'

OXFORD ARCHITECTURE
2934 Sidco Drive
Suite 120
Nashville, TN 37204
Architecture
Planning
Interior Architecture

TSC
TRACTOR SUPPLY COMPANY
BOUTTE LOUISIANA

This drawing and the design shown is the property of the architect. The reproduction, copying or use of this drawing without their written consent is prohibited and any infringement will be subject to legal action

Job Number: 2428
Date: 07.23.2024
Revisions:
Revisions:
Revisions:
SITE PLAN
Sheet Number: AS1.0

NEW STORE - TIME AND ACTION CALENDAR

Q4 2023

TASK	COMPLETION DATE (WEEKS TO CONSTRUCTION TURNOVER DATE)	CONTACT	RESPONSIBILITY
ARCHITECT TO EMAIL FLOOR PLAN BASE SHEET AND BASE PLAN REVIEW CHECKLIST TO TSC STORE PLANNING AND SECURITY SYSTEMS VENDOR	UPON COMMENCEMENT OF CONSTRUCTION DOCUMENTS	TSC - THOMAS PAYNE - thpayne@tractorsupply.com TSC - PEYTON TONEY - ptoney@tractorsupply.com JCI - GAIL DRAKE - gail.drake@jci.com OR ADT - DUKE DAUGHTREY - ddaughtrey@adt.com	ARCHITECT
ARCHITECT TO OBTAIN PROPANE LOCATION APPROVAL STAMP AND DATE FROM TSC	PRIOR TO SCHEDULE I SUBMISSION	TSC - CLINT WEAVIL - cweavil@tractorsupply.com	ARCHITECT
DEVELOPER TO OBTAIN STATE AND LOCAL PERMITS, INCLUDING SEISMIC ANCHOR PERMITS FOR FIXTURES WHEN REQUIRED	PRIOR TO SCHEDULE II SUBMISSION	TSC - CARL ADLER - caadler@tractorsupply.com TSC - THOMAS PAYNE - thpayne@tractorsupply.com	DEVELOPER
ARCHITECT TO UPLOAD PLANS TO PLAN EXPRESS	LATEST REVISED DOCUMENTS AT BID AT PERMIT APPROVAL	PLAN EXPRESS - #866.404.2614 customerservice@planexpress.net	ARCHITECT
CONTRACTOR TO CONTACT SECURITY SYSTEMS CONTRACTOR AND SCHEDULE ALARM INSTALLATION	7 WEEKS	JCI - GAVIN ELLIS - gavin.1.ellis@jci.com ADT - DUKE DAUGHTREY - ddaughtrey@adt.com	CONTRACTOR
FINAL FIXTURE PLAN PROVIDED BY TSC	6 WEEKS	TSC - CARL ADLER - caadler@tractorsupply.com TSC - THOMAS PAYNE - thpayne@tractorsupply.com	TSC FIXTURE PLANNING
BACKBOARD (4X8 HORIZONTAL) PAINTED WHITE	4 WEEKS	TSC - STAN KOLIC - #615.440.4824	CONTRACTOR
SECURITY SYSTEMS CONTRACTOR - HAS TO BEGIN INSTALLATION (PHONE BOARD UP)	3 WEEKS	JCI - GAVIN ELLIS - gavin.1.ellis@jci.com ADT - DUKE DAUGHTREY - ddaughtrey@adt.com	TSC LOSS PREVENTION
CONTRACTOR - CONDUITS FOR IT AND PHONE WITH PULL STRINGS	4 WEEKS	TSC - STAN KOLIC - #615.440.4824	CONTRACTOR
QSI / DURA-RAMP OR LOADING DOCK ACCESS, FORKLIFT, PROPANE GAS AND PROPANE DIS. TANK (PROPANE FOR FORKLIFT AND HEAT IF NECESSARY)	4 WEEKS	AMERIGAS - SCOTT PIERCE (317.709.2339) scott.pierce@amerigas.com CHRIS SAUER (610.768.7612) christopher.sauer@amerigas.com MOLLIE TRELOAR (615.440.4230) mtreloar@tractorsupply.com MARIAH CRAYTON (615.647.2639) mcrayton@tractorsupply.com	TSC STORE ADMINISTRATION & CONTRACTOR
CONSTRUCTION TRUCK ARRIVES	3 WEEKS BY TUESDAY	CAROLINE RICE (615.440.4705) crice@tractorsupply.com	
IMPRESSIONS TRUCK ARRIVES	3 WEEKS BY TUESDAY	CAROLINE RICE (615.440.4705) crice@tractorsupply.com	
INSTALL DATE FOR PHONE LINES NEED #6 GROUND AT BOARD	3 WEEKS	TSC - STAN KOLIC - #615.440.4824	IT
IT / ELECT. CLOS. AND MANAGERS OFFICE FINISHED - DUPLEX BOXES AND DEDICATED POWER	3 WEEKS	TSC - STAN KOLIC - #615.440.4824	CONTRACTOR
CONTRACTOR - ALL DOORS TO BE INSTALLED WITH LOCKS	3 WEEKS	DH PACE - NATIONAL ACCOUNTS CONSTRUCTION TEAM (NAC) - #888.722.3667 X 10031 tscdoors@dhpace.com	CONTRACTOR
PERMANENT POWER TO BUILDING	3 WEEKS	SITE SUPERVISOR	CONTRACTOR
METER INFORMATION	15 DAYS PRIOR TO FIXTURE DATE	ECOVA - TractorSupplyOPCL.insight@engie.com	CONTRACTOR
UNIFIRST - MOPS AND MATS	1 WEEK	UNIFIRST - #888.851.2474 X 5 BRAD COOPER (615.440.4965) bcooper@tractorsupply.com	TSC STORE ADMINISTRATION
TERMINIX - (PEST CONTROL)	1 WEEK	TERMINIX - #866.818.4573 BRAD COOPER (615.440.4965) bcooper@tractorsupply.com	TSC STORE ADMINISTRATION
ROCK-TENN WASTE MANAGEMENT DUMPSTER SERVICE (40 YARD DUMPSTER)	1 WEEK	ROCK-TENN WASTE MANAGEMENT - #800.333.8879 BRAD COOPER (615.440.4965) bcooper@tractorsupply.com	TSC STORE ADMINISTRATION
SERVICE DESK, RECEIVING DESK, REGISTER COUNTERS WITH POWER POLES SET IN PLACE	1 WEEK	CAROLINE RICE (615.440.4705) crice@tractorsupply.com	CONTRACTOR
CABELING INSTALLED TO REGISTER COUNTERS, SERVICE DESK AND RECEIVING DESK CONNECT TO PERMANENT POWER	1 WEEK	TSC - STAN KOLIC - #615.440.4824	IT
PLAY NETWORK INSTALLED BY TSC	1 WEEK	PLAY NETWORK - #800.342.0105 BRAD COOPER (615.440.4965) bcooper@tractorsupply.com	TSC STORE ADMINISTRATION
PROPANE PROVIDER TO FILL PROPANE DISTRIBUTION TANK	1 WEEK	MOLLIE TRELOAR (615.440.4230) mtreloar@tractorsupply.com MARIAH CRAYTON (615.647.2639) mcrayton@tractorsupply.com	TSC STORE ADMINISTRATION
EXTERIOR DRESSING ROOM WALLS PAINTED & DRIED	1 WEEK	SITE SUPERVISOR	CONTRACTOR
CONTRACTOR TO COORDINATE INSTALLATION OF FIXTURES PRIOR TO THIS WEEK, INCLUDING SEISMIC ANCHORING FOR FIXTURES WHEN REQUIRED.	FIXTURE WEEK		CONTRACTOR
TRANSITION WEEK - ALL CONSTRUCTION ACTIVITIES ARE TO BE COMPLETED PRIOR TO THIS WEEK.	FIXTURE WEEK		CONTRACTOR
SOS (FULL TRUCK)	5 DAYS (WEDNESDAY)	CAROLINE RICE (615.440.4705) crice@tractorsupply.com	TSC STORE ADMINISTRATION
LIS - BACKROOM AND SIDELOT FIXTURES (1/2 TRUCK)	4 DAYS (THURSDAY)	CAROLINE RICE (615.440.4705) crice@tractorsupply.com	TSC STORE ADMINISTRATION
NATIONAL CART - CART CORRAL (1/2 TRUCK)	4 DAYS (THURSDAY)	CAROLINE RICE (615.440.4705) crice@tractorsupply.com	TSC STORE ADMINISTRATION
MEG - FIXTURES (3/4 OF A TRUCK)	3 DAYS (FRIDAY)	CAROLINE RICE (615.440.4705) crice@tractorsupply.com	TSC STORE ADMINISTRATION
LOZIER - FIXTURES - FULL TRUCK	3 DAYS (FRIDAY)	CAROLINE RICE (615.440.4705) crice@tractorsupply.com	TSC STORE ADMINISTRATION
ROCK-TENN WASTE MANAGEMENT - RETURN 40 YARD DUMPSTER AND GET REGULAR SERVICE	SOFT OPENING	ROCK-TENN WASTE MANAGEMENT (800.333.8879) BRAD COOPER (615.440.4965) bcooper@tractorsupply.com	TSC STORE ADMINISTRATION
TELECHECK MACHINES	2 WEEKS TO SOFT OPENING	TELECHECK - MAX PUENTE - #713.331.7018 max.puente@firstdata.com	TSC STORE ADMINISTRATION

LVW RESPONSIBILITY AND TIMING PLAN

Q4 2023

RETROFITS

ACTION	BY WHO	WHEN	SPECIAL NOTES
STORE ADDED TO SOS	TSC REAL ESTATE	1ST MONDAY OF EACH MONTH	
TSC ARCHITECT TO SEND BASE PLAN TO SECURITY SYSTEMS CONTRACTOR	TSC PM	10-20 DAYS AFTER ADDED TO SOS	
CODES RESEARCHED, BA AND FA PLANS	JCI / ADT	UPON RECEIPT OF BASE PLAN	
TSC ARCHITECT TO NOTIFY SECURITY SYSTEMS CONTRACTOR VIA EMAIL THAT FULL SET OF PLANS IS AVAILABLE AT PLAN EXPRESS	TSC PM	20-30 DAYS AFTER REC APPROVAL	SECURITY SYSTEMS CONTRACTOR TO IDENTIFY EXIST. HVAC UNITS BY LL PER THE CHECKLIST
SECURITY SYSTEM COMPLETED PLANS SENT TO RICH WOOD AND TSC PM	JCI / ADT	W/IN 3 DAYS OF RECEIPT OF FULL SET OF PLANS	
TSC ARCHITECT TO INSERT SECURITY SYSTEM PLANS INTO SET FOR PERMIT	TSC PM	UPON RECEIPT OF SECURITY SYSTEMS PLAN	
GC TO CONTACT ASSIGNED LVW VENDORS FOR PRICING	TSC PM	VERIFIED AT BID EVALUATION	
GC / LVW VENDOR FINISHED ALL LVW SOW PER PLANS	MERCURY TECH	NO LESS THAN 2 WEEKS PRIOR TO FD	PLEASE BE SURE TO VERIFY HVAC SYSTEMS (GROUND MOUNT VS. ROOF MOUNT, ETC...)
SECURITY SYSTEMS CONTRACTOR TO INSTALL THEIR EQUIPMENT AND MAKE TERMINATIONS	JCI / ADT	STARTING APPROXIMATELY 3 WEEKS FROM FD TO WEDNESDAY PRIOR TO FD. TERMINATION TO BE DONE LAST AS LVW VENDOR COMPLETES NO LATER THAN 2 WEEKS PRIOR TO FD.	
INSTALLATION OF PA SYSTEM, PHONE SYSTEM, SPEAKERS, OUTSIDE HORNS, PHONES, PATCH PANEL, APS W/ ANTENNAS INSTALLATION OF POS SYSTEMS AT ALL LOCATIONS AND TESTING OF AP SYSTEM	STAN KOLIC / MERCURY TECH	MONDAY AND TUESDAY BEFORE FD	
	STAN KOLIC / AGYLISIS	THURSDAY BEFORE FD	

NOTE: ALL OTHER ACTIONS AND TIME FRAMES TO BE PER THE EXISTING TIMING AND ACTION CALENDAR.

TRACTOR SUPPLY COMPANY MAINTAINS NATIONAL ACCOUNTS WITH THE SIGNAGE MANUFACTURERS LISTED BELOW. PLEASE REFER TO THE MAP FOR APPROPRIATE SIGNAGE PROVIDER PER LOCATION.

ID ASSOCIATES

CONTACT INFORMATION
DeANNA PAYNE
OFFICE: #334.836.1400 X 122
MOBILE: #334.805.1012
dpayne@idassociatesinc.com
OR
BILL HOLLAND
OFFICE: #334.836.1400
MOBILE: #334.791.0108
jholland@idassociates.com

SIGN RESOURCES

CONTACT INFORMATION
PAT PATTERSON
OFFICE: #727.669.6877 X 305
MOBILE: #727.235.2395
ppatterson@tsrfl.com
OR
BUTCH JACKSON
OFFICE: #727.669.6877 X 301
MOBILE: #727.647.3526
bjackson@tsrfl.com

TRACTOR SUPPLY COMPANY MAINTAINS NATIONAL ACCOUNTS WITH THE VINYL PLANK MANUFACTURERS LISTED BELOW. PLEASE REFER TO THE MAP FOR APPROPRIATE FLOORING PROVIDER PER LOCATION.

WESTERN DIVISION
REGIONS 1, 4, 6, 7, 8 & 9

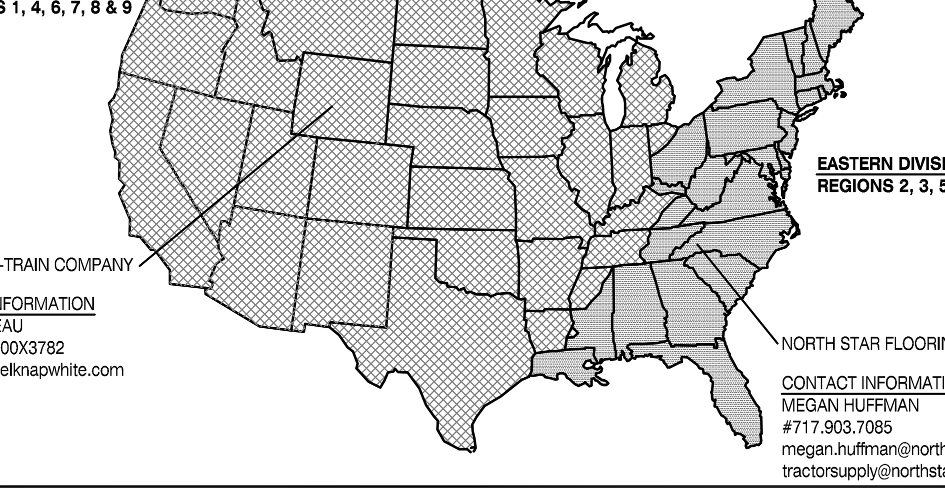

EASTERN DIVISION
REGIONS 2, 3, 5, 10, 11 & 12

SWIFF-TRAIN COMPANY

CONTACT INFORMATION
PAM CORNEAU
#800.283.7500X3782
pcorneau@belknapwhite.com

NORTH STAR FLOORING

CONTACT INFORMATION
MEGAN HUFFMAN
#717.903.7085
megan.huffman@northstarflooring.com
tractorsupply@northstarflooring.com

GENERAL NOTES:

Q4 2023

1. ALL CONSTRUCTION AND DETAILS SHALL COMPLY WITH ALL APPLICABLE STATE AND LOCAL BUILDING CODES AND ORDINANCES AS OF THE DATE OF THE DRAWINGS. ANY DEVIATIONS FROM BUILDING CODES REQUIRES NOTIFICATION AND APPROVAL FROM TSC PROJECT MANAGER.
2. THE CONTRACTOR SHALL VERIFY EXISTING CONDITIONS OF THE SITE. DISCREPANCIES SHALL BE REPORTED TO THE ARCHITECT & OWNER PRIOR TO PROCEEDING WITH CONSTRUCTION.
3. REMOVE ALL CONSTRUCTION AND DEMOLITION DEBRIS FROM JOB SITE DAILY. MAKE JOB PREMISES CLEAN AT COMPLETION OF PROJECT.
4. FIRE EXTINGUISHERS SHALL BE INSTALLED IN ACCORDANCE WITH THE LOCAL FIRE DEPARTMENT PRIOR TO COMPLETION OF CONSTRUCTION.
5. ALL DIMENSIONS ARE FACE OF DRYWALL AT NEW WALLS AND TO FINISHED FACE AT MASONRY WALLS UNLESS NOTED OTHERWISE.
6. NOTED DIMENSIONS TAKE PRECEDENCE OVER SCALED DRAWINGS.
7. CONTRACTOR SHALL VERIFY ALL DIMENSIONS. IF DISCREPANCIES ARE FOUND, THE ARCHITECT AND OWNER SHALL BE NOTIFIED IMMEDIATELY.
8. THRESHOLDS SHALL NOT EXCEED 1/2 INCH IN HEIGHT.
9. DRYWALL TO BE HELD UP 1/2" ABOVE CONCRETE FLOOR.
10. THE FOLLOWING ITEMS ARE FURNISHED BY T.S.C. AND INSTALLED BY THE CONTRACTOR.

QUANTITY	ITEM
1 SET	RESTROOM ACCESSORIES (NOT INCLUDING MIRRORS) FIRE EXTINGUISHERS BRAILLE SIGNAGE

11. THE FOLLOWING ITEMS ARE FURNISHED AND INSTALLED BY T.S.C.

QUANTITY	ITEM
1	"OPEN" SIGN
1	"CUB CADET" SIGN
1	T.S.C. ROAD SIGN, GENERAL CONTRACTOR TO PROVIDE POWER TO SIGN BASE. COORDINATE WITH SIGN COMPANY ASSIGNED TO THIS LOCATION
1	SECURITY VENDOR WORK (NOT INCLUDING LVW) PAID BY TSC

12. SPECIFIC MANUFACTURERS AND PRODUCTS ARE NAMED ON THE DRAWINGS TO INDICATE THE MINIMUM ACCEPTABLE LEVEL OF QUALITY. EQUAL OR BETTER PRODUCTS WILL BE CONSIDERED. SUBSTITUTES MUST BE APPROVED BY TSC PM.
13. ALL OFFICE WALLS TO BE INSULATED.
14. CONCEAL ALL PIPING IN WALLS. WHERE PIPING IS TOO LARGE WALLS ARE TO BE FURRED OUT A MINIMUM TO CONCEAL PIPING.
15. PROVIDE WATER RESISTANT GYPSUM BOARD BEHIND ALL PLUMBING FIXTURES.
16. ALL COUNTERTOPS TO BE 2'-0" IN DEPTH UNLESS OTHERWISE NOTED.
17. PROVIDE SOLID BLOCKING FOR WALL HUNG CABINETS, PLUMBING FIXTURES, ACCESSORIES AND MILLWORK.
18. ALL MATERIALS USED BY ALL TRADES SHALL BE LISTED AND LABELED BY AN APPROVED AGENCY AND INSTALLED PER THE MANUFACTURES INSTRUCTIONS.
19. TSC RESERVES THE RIGHT TO REVIEW THE BUILDING ON OR BEFORE THE EXPIRATION OF THE LL'S ONE YEAR WARRANTY. IF ANY WARRANTY OR PUNCH LIST ITEMS ARE FOUND THE LL SHALL IMMEDIATELY CORRECT THE CONDITION AT ITS' EXPENSE.
20. WHEN SOS TRUCK COMES AS SCHEDULED, GENERAL CONTRACTOR TO ASSIST TSC STORE MANAGER WITH THE UNLOADING AND STORAGE OF ALL SOS TRUCK CONTENTS. IF GENERAL CONTRACTOR REQUESTS SOS TRUCK EARLY, GENERAL CONTRACTOR IS RESPONSIBLE FOR ALL LABOR AND EQUIPMENT REQUIRED TO UNLOAD AND PROPER PLACEMENT AND STORAGE OF CONTENTS ONCE OFF SOS TRUCK.
21. GENERAL CONTRACTOR TO PROVIDE 2 COPIES OF SITE PLAN AND ELEVATIONS TO SIGN COMPANY ASSIGNED TO THIS PROJECT. VERIFY SIGN COMPANY W/ TSC. 1 COPY OF ELEVATIONS TO POP SOLUTIONS, RICK TOWNE @ 901.795.5936 -- ARCHITECT TO E-MAIL CAD BASE OF FLOOR PLAN TO THOMAS PAYNE, THPAYNE@TRACTORSUPPLY.COM), NO LATER THAN TWO WEEKS OF STARTING CONSTRUCTION.
22. GENERAL CONTRACTOR SHALL COORDINATE ENTIRE PROJECT AND SCHEDULE THE ALARM COMPANY FOR ALL ROUGH-IN AND FINAL CONNECTIONS AND INSPECTIONS. CONTACT TSC, RICH WOOD @ 615.440.4721 FOR THE ALARM COMPANY ASSIGNED TO THIS LOCATION NO LATER THAN TWO WEEKS AFTER CONSTRUCTION START. REFER TO THE SECURITY VENDOR PRE-CONSTRUCTION AND PRE-INSTALLATION CHECKLIST.
23. CLOSE-OUT REQUIREMENTS, REFER TO LEASE / CONTRACT. FOR QUESTIONS, CONTACT JULIE BANE @ 615.440.4795.
24. THE MECHANICAL CONTRACTOR SHALL FURNISH AND INSTALL ANY DUCT SMOKE DETECTOR FOR NEW WORK ONLY. COORDINATE WITH THE ASSIGNED ALARM COMPANY.
25. THE GENERAL CONTRACTOR SHALL PAY FOR ALL UTILITY COST DURING CONSTRUCTION AND CONTACT DEEANA GHOLSON AT ECOVA, INC. #509.329.7516 TWO WEEKS PRIOR TO FIXTURE DATE FOR TRANSFER TO TSC.
26. DOCK ACCESS FROM ROAD MUST BE ACHIEVED 3 WEEKS PRIOR TO FIXTURE DATE.
27. THE GENERAL CONTRACTOR OR LANDLORD SHALL SUBMIT A REPORT, ON A WEEKLY BASIS INDICATING THE PERCENT COMPLETE FOR EACH LINE ITEM ON THE SCHEDULE USING THE TSC WEEKLY PROGRESS REPORT ALONG WITH PHOTOS PER PHOTO LOG ON THE BLANK REPORTS PROVIDED BY TSC.
28. THE GENERAL CONTRACTOR SHALL PROVIDE FOR INDEPENDENT INSPECTION AND CERTIFICATION FOR FOOTING COMPACTION, AND CONCRETE QUALITY AND STRENGTH. THE RESULTS ARE TO BE SUBMITTED TO THE OWNER THE G.C. SHALL LIKEWISE PROVIDE AN INDEPENDENT INSPECTOR TO CERTIFY PROPER INSTALLATION OF THE STRUCTURAL STEEL OR PRE-ENGINEERED METAL BUILDING SYSTEM.
29. FOR RED STRIPING, CONTACT POP SOLUTIONS AT 901-795-5936, ACCOUNT REP.: RICK TOWNE.
30. LANDLORD/LANDLORD GENERAL CONTRACTOR TO VERIFY WITH LOCAL POSTMASTER IF A MAILBOX IS REQUIRED. IF SO, GENERAL CONTRACTOR TO INSTALL MAILBOX TYPE AND LOCATION PER THE POSTMASTER RECOMMENDATION AND PER USPS STANDARDS.
31. 'J' MOLD TO BE USED AT ALL INTERSECTIONS OF GYPSUM BOARD AND ANY OTHER NON-GYPSUM MATERIAL.
32. CORNER GUARDS TO BE USED AT ALL INTERIOR 'OUTSIDE' CORNER CONDITIONS.
33. DURING CONSTRUCTION, ANY PARTIALLY COMPLETED MASONRY WALLS (CMU, BRICK, ETC.) SHALL BE COVERED WITH STRONG WEATHER RESISTIVE MATERIAL DURING ALL TIMES WHEN CONSTRUCTION IS NOT IN PROGRESS AND ESPECIALLY AT THE END OF EACH WORK DAY. THE COVER SHALL BE DRAPED OVER THE WALL AND EXTEND A MINIMUM OF (2) TWO FEET DOWN FROM BOTH SIDES AND SECURELY HELD IN PLACE.
34. FOR SOS TRUCK DELIVERIES ON RELO STORES, COORDINATE WITH TSC STORE SERVICES SPECIALIST [CAROLINE RICE (CRICE@TRACTORSUPPLY.COM)] FOR RENTAL TOW-MOTOR DROP. RENTAL TOW-MOTOR SHOULD ARRIVE NO LATER THAN THE WEDNESDAY PRIOR TO FIXTURE DATE. THE RENTAL TOW-MOTOR WILL BE PICKED-UP THE MONDAY FOLLOWING THE STORE'S SOFT OPENING DATE.
35. FINISHED SPACE SHALL BE PROVIDED IN A MANNER THAT PREVENTS RODENT INTRUSION. SEAL PENETRATIONS THROUGH EXTERIOR WALL SURFACES WITH AN AEROSOL, MOISTURE-CURING POLYURETHANE FOAM SIMILAR TO "PUR BLACK" BY TODOL PRODUCTS, INC. @ 508.651.3818 OR APPROVED EQUAL.
36. CONCRETE MASONRY UNITS AND EXTERIOR CONCRETE MOISTURE CONTENT CRITERIA. GENERAL CONTRACTOR, OR, THE OWNERS TESTING COMPANY SHALL PROVIDE MOISTURE TESTING OF ALL CMU AND CONCRETE EXTERIOR WALL PER ASTM D4263 PRIOR TO APPLICATION OF PAINT.
37. TSC PROJECT MANAGER MUST APPROVE THE APPLICATION OF PAINT IN WRITING, IF THE MOISTURE CONTENT IS ABOVE 15%.
38. GENERAL CONTRACTOR TO HAVE A LOCAL CONTACT WITHIN 2-HOURS FOR ALL (NON)WARRANTY ELECTRICAL AND/OR PLUMBING CALL BACK REPAIRS.
39. ADD STEEL WOOL AT ALL CONDUIT/PIPE PENETRATIONS AT EXTERIOR WALLS AND ADD ESCUTCHEON PLATE AND PROVIDE SEALANT AT ALL ESCUTCHEON EDGES TO PREVENT RODENT INTRUSION.
40. AT EXISTING HVAC CURBS, CONTRACTOR TO INSTALL STEEL WOOL AND CLOSED-CELL SPRAY FOAM AT ALL CURB PENETRATIONS TO PREVENT RODENT INTRUSION. CONTRACTOR TO VERIFY ALL WARRANTIES REMAIN INTACT AND APPROVED BY LANDLORD.

FINAL FIXTURE PLAN TO BE RECEIVED BY CONTRACTOR AND/OR LL APPROXIMATELY 8 WEEKS PRIOR TO FIXTURE DATE TO ESTABLISH PROPER PLACEMENT OF ALL COUNTERS, POWER POLES, AND WOOD GRAIN FLOORING.

CLOSE-OUT BINDER REQUIREMENTS

Q4 2023

PM **STORE # CITY/STATE** ______________________ **SO** ____________

X = REQUIRED

PROTO	RETRO		CONTRACTOR SHALL PROVIDE OWNER WITH ONE ELECTRONIC CLOSE-OUT BINDER ON A CD. ALL INFORMATION BELOW MUST BE INCLUDED. THE CLOSE-OUT BINDER SHALL BE SENT ATTN TO THE CONSTRUCTION COORDINATOR AT THE OWNER'S ADDRESS: 5401 VIRGINIA WAY, BRENTWOOD, TN 37027.
X	X	1.	NAME, ADDRESS AND TELEPHONE NUMBER OF THE CONTRACTOR AND ALL SUBCONTRACTORS.
X	X	2.	THE FINAL CERTIFICATE OF OCCUPANCY OR THE EQUIVALENT THEREOF DESCRIBED IN ARTICLE 15.5.2(b)
X	X	3.	AN ASSIGNMENT BY THE CONTRACTOR OF ALL GUARANTEES AND WARRANTIES FROM ALL SUBCONTRACTORS, VENDORS, SUPPLIERS, AND MANUFACTURERS, TOGETHER WITH ORIGINALS OF ALL SUCH GUARANTEES, WARRANTIES, AND OPERATING MANUALS (E.G. HVAC, ROOF, DOORS, WATER HEATER, ETC. AS APPLICABLE).
X	X	4.	COMPLETE LIST OF EQUIPMENT - COMPLETE TEMPLATE.
X	X	5.	CONFIRMATION IN WRITING FROM THE INSTALLER OF THE HVAC SYSTEM OR COMPONENTS THEREOF CONFIRMING THAT THE PROPER START-UP PROCEDURES WERE FOLLOWED.
N/A	X	6.	COMPLETE RETROFIT HVAC BREAKDOWN OF COSTS - COMPLETE TEMPLATE.
X	N/A	7.	COMPLETE PROTOTYPE HVAC INFORMATION - COMPLETE TEMPLATE.
N/A	X	8.	CERTIFICATE OF SEWER CLEAN-OUT BY THE PERSON WHO PERFORMED THE SAME.
X	X	9.	DISABILITY ACCESSIBILITY INSPECTION REPORTS SENT TO THE TEXAS DEPARTMENT OF LICENSING AND REGULATION (FOR TEXAS STORES ONLY).
X	X	10.	A COPY OF THE PUNCH LIST ITEMS SIGNED BY THE OWNER (OR STORE MANAGER, IF SO AUTHORIZED BY OWNER) CONFIRMING ALL PUNCH LIST ITEMS ARE COMPLETED.
X	X	11.	(1) PDF CONTAINING WORKING DRAWINGS AND PLANS AND SPECIFICATIONS REFLECTING 'AS-BUILT' CONDITIONS, WITH A SUMMARY LIST OF CHANGES, INCLUDING IN .PDF FORMAT.
X	X	12.	A COMPLETE SET OF FIRE SPRINKLER SHOP DRAWINGS, IF APPLICABLE.
N/A	X	13.	A CERTIFICATE EVIDENCING THAT INSURANCE REQUIRED UNDER THE CONTRACT DOCUMENTS SHALL REMAIN IN FORCE AFTER FINAL PAYMENT AND SHALL NOT BE CANCELED, REDUCED, OR ALLOWED TO EXPIRE UNTIL AT LEAST 30 DAYS PRIOR WRITTEN NOTICE HAS BEEN GIVEN TO THE OWNERS.
X	X	14.	CERTIFICATION OF WATER WELLS AN/OR SEPTIC SYSTEMS THAT DEMONSTRATE INSPECTION AND ACCEPTANCE BY THE MUNICIPALITY. THIS SHOULD INCLUDE ANY ONGOING TESTING AND/OR INSPECTIONS THAT ARE REQUIRED AS WELL AS THE INTERVAL AT WHICH TESTING AND/OR INSPECTION MUST BE COMPLETED.
N/A	X	15.	DIGITAL PHOTOGRAPHS OF THE 'BEFORE' AND 'AFTER' OF THE FRONT VIEW OF THE STORE.
X	X	16.	ROOFING INSPECTION REPORT FROM THE ROOFING MANUFACTURER (SHOULD REFLECT ROOF PROPERLY INSTALLED AND AS SUCH WARRANTY 100% IN TACT).
X	N/A	17.	CERTIFICATION FROM THE PROJECT CIVIL ENGINEER THAT THE STORM WATER DRAINAGE SYSTEM HAS BEEN CONSTRUCTED AND INSTALLED IN ACCORDANCE WITH THE APPROVED PLANS AND ALL APPLICABLE LAWS (SEE LEASE EXHIBIT).

TSC PM - SIGNATURE DATE

NOTE: GENERAL CONTRACTOR / LANDLORD TO SEE LEASE / CONTRACT FOR SPECIFIC CHECKLIST

EXHIBIT H-1: TRAINING CERTIFICATION

COPY OF THIS EXECUTED DOCUMENT TO BE INCLUDED IN THE CLOSE OUT DOCUMENTS PROVIDED BY THE GENERAL CONTRACTOR
(FOR RETRO FIT BY TENANT) OR LANDLORD (RETRO FIT BY LL AND GROUND UP PROJECTS) **TO TRACTOR SUPPLY COMPANY!**

INITIAL TSC STORE MANAGER	INITIAL GC	TRAINING HAS BEEN COMPLETED WITH THE STORE MANAGER BY THE GENERAL CONTRACTOR (GC) ON HOW TO USE, OPERATE AND MAINTAIN:
		THE IRRIGATION SYSTEM. ALSO, THE TSC STORE MANAGER HAS BEEN ADVISED THAT THE STORE IS RESPONSIBLE FOR MAINTAINING ALL LANDSCAPING STARTING AT EITHER FIXTURE DATE OR COMPLETION DATE, THE LATTER OF THE TWO DATES.
		THE LIGHT TIMER SYSTEM INCLUDING REVIEW OF THE SCHEDULE
		THE HVAC SYSTEM OPERATION INCLUDING HOW TO ADJUST THE PROGRAMMABLE THERMOSTATS.
		THE AUTOMATIC FRONT DOORS OPERATIONS INCLUDING SENSOR ADJUSTMENTS.
		THE OVERHEAD DOORS OPERATIONS INCLUDING TIMER, TIMER OVERIDE, AND SAFETY EDGE.
		THE DELAY EGRESS DOOR (THE RESET BUTTON IS IN THE CONTROL BOX AND HAS TO BE RESET ANY TIME POWER IS LOST).

STORE # ____________________

CITY/STATE ____________________

STORE MANAGER ____________________

GENERAL CONTRACTOR

TSC & VENDOR CONTACT INFORMATION

(CLOSED SPECIFICATIONS)

TRACTOR SUPPLY FIXTURE PLANS
THOMAS PAYNE, RETAIL STORE PLANNER
#615.647.2647
thpayne@tractorsupply.com

PEYTON TONEY, RETAIL STORE PLANNER
ptoney@tractorsupply.com

DOORS, FRAMES, & DOOR HARDWARE
NATIONAL ACCOUNTS CONSTRUCTION TEAM (NAC)
DH PACE
#888.722.3667 X 10031
tscdoors@dhpace.com
LEAD TIME:
2 WEEKS - HOLLOW METAL FRAMES
3 WEEKS - PRE-PAINTED & HPI DOORS
6-8 WEEKS - WIND RATED ASSEMBLIES & COASTAL
*DH PACE UNCRATING DOOR PACKAGE QR CODE:
SCAN WITH SMARTPHONE OR TABLET TO WATCH VIDEO

SECTIONAL DOORS
NATIONAL ACCOUNTS CONSTRUCTION TEAM (NAC)
DH PACE
#888.722.3667 X 10031
tscdoors@dhpace.com
LEAD TIME:
5-6 WEEKS - SECTIONAL & COILING DOORS
*USE COILING DOORS IN HIGH IMPACT REGIONS

STOREFRONT DOORS
BILL GERARDIN, NATIONAL ACCOUNT MANAGER
ALLEGION ACCESS TECHNOLOGIES
#480.257.0619
william.gerardin@allegion.com

SAMANTHA FAULSTICK, NATIONAL ACCOUNTS PM
ALLEGION ACCESS TECHNOLOGIES
#843.962.0996
samantha.faulstick@allegion.com
LEAD TIME: 6 WEEKS

LIGHTING PROVIDER
BRYAN BIRDWELL
VILLA LIGHTING SUPPLY, INC.
#314.633.0546
bryan.birdwell@villalighting.com

ADAM CARRIER, NATIONAL ACCOUNTS MANAGER
VILLA LIGHTING SUPPLY, INC.
#314.633.0532
adam.carrier@villalighting.com

ANNE VOELKER, PRICING CONTACT
VILLA LIGHTING SUPPLY, INC.
#314.633.0554
tractorsupply@villalighting.com
LEAD TIME:
3-5 DAYS - INT/EXT LIGHTING
3-4 WEEKS - SITE POLE LIGHTING

HVAC PROVIDER
STEVEN PETER, NATIONAL ACCOUNTS
LENNOX
#404.403.7083
steven.peter@lennoxind.com

GARRY BAKER
LENNOX
#800.367.6285
lennoxnationalaccounts@lennoxind.com
LEAD TIME: 20 WEEKS

DAVID ARPS, ACCOUNT MANAGER
YORK / JOHNSON CONTROLS
#414.687.7101 DIRECT
#800.481.9738 TECH SUPPORT
david.w.arps@jci.com
be-na-tractorsupply@jci.com

JOE RAY, PRODUCT APPLICATION ENGINEER
YORK / JOHNSON CONTROLS
#405.419.6631 DIRECT
#800.481.9738 TECH SUPPORT
joe.ray@jci.com
be-na-tractorsupply@jci.com
LEAD TIME: 15-24 WEEKS

METAL RAMP DISTRIBUTOR
TONY HAMILTON
QSI ENVIRONMENTAL & INDUSTRIAL STEEL FABRICATORS
#334.793.6878
thamilton@qsisteel.com
LEAD TIME: 3 WEEKS

ANDREW STREUTKER
DURA-RAMP, INC.
#604.795.9799
andrew@duraramp.com
LEAD TIME: 3-5 WEEKS

GARDEN CENTER
JALIYAH SANFORD
MERCHNEY GREENHOUSES
#864.314.0603
jaliyah@merchneygreenhouses.com

PAINT
DANIEL CHAISSON, REGIONAL ACCOUNT EXECUTIVE
THE SHERWIN-WILLIAMS COMPANY
#901.484.3409
daniel.chaisson@sherwin.com

TOM KERR, CORPORATE ACCOUNT MANAGER
PPG PAINTS
#614.580.8305
thomas.kerr@ppg.com

FIXTURE ANCHORING
BRENDON COLLINS, PROJECT MANAGER
TAMARACK GROVE
#208.908.7874
brendon.collins@tamarackgrove.com

UTILITY TRANSFER INFORMATION
JAMES MASTERS, TSC ENERGY MANAGER
ENGIE
#615.440.4396
jmasters@tractorsupply.com
tractorsupplyopcl.insight@engie.com
(FOR LP ACCOUNTS FOR BUILDING HEAT CALL AMERIGAS)

FIRE ALARM & SECURITY SYSTEMS
RON KING, NATIONAL ACCOUNTS MANAGER
ADT
ronaldking@adt.com

DUKE DAUGHTREY, PROJECT MANAGER
ADT
#229.896.5041
ddaughtrey@adt.com

ELECTRIC PANEL
CAMERON KEANE, ACCOUNT MANAGER
CAROLINA PRODUCTS, INC. (CPI)
#704.364.9029 OFFICE
#919.621.9038 CELL
cameronk@cpipanels.com
LEAD TIME: 6 WEEKS

EMS
GAGE PERRY
PHILIPS TELETROL
#603.716.0636
g.perry@brainboxai.com

LOW VOLTAGE PROVIDER
TERRY L CORPENING
MERCURY TECH PARTNERS, INC.
#828.465.7348 x 4221
terry@gomtp.com

DUANE MULLINS
MERCURY TECH PARTNERS, INC.
#828.465.7348 x 4344
duane@gomtp.com

RESTROOM DRYERS
ASHLEY MAY
WORLD DRYERS DISTRIBUTOR
#800.459.7099
ashley.may@hjcinc.com

BALER
CORY GARDNER, NATIONAL ACCOUNTS MANAGER
JWR, INC.
888.699.2848
cory@jwrinc.net

PROPANE COORDINATION
MOLLIE TRELOAR
BUYER - HEATING AND COOLING
TRACTOR SUPPLY COMPANY
#615.440.4230
mtreloar@tractorsupply.com

MARIAH CRAYTON
ASSOCIATE BUYER - HEATING AND COOLING
TRACTOR SUPPLY COMPANY
#615.647.2639
mcrayton@tractorsupply.com

PARKING SIGNS / BOLLARD COVERS
STEPHEN COATS
MCCUE
#404.405.8101
scoats@mccue.com

PROPANE CANOPY
SPENCER BRATTON
VERSATUBE BUILDING SYSTEMS
#901.614.2192

ELECTRIC FORKLIFT
CHUCK TOLLEY
LIFTONE
#615.220.5320
ctolley@liftone.net

MIKE ZECK
LIFTONE
#615.295.9013
mzeck@liftone.net

BRANDEN HARRISON
HYSTER YALE GROUP
#252.364.6382
branden.harrison@hyster-yale.com

SIGNS
MICHELLE WENDLING, ACCOUNT MANAGER
YUNKER SIGNAGE
#414.339.5349
mwendling@yunker.com

SIGNAGE MANUFACTURER
PAT PATTERSON
SIGN RESOURCES
#727.669.6877 X 305
ppatterson@tsrfl.com

BUTCH JACKSON
SIGN RESOURCES
#727.669.6877 X 301
bjackson@tsrfl.com

VINYL PLANK FLOORING
MEGAN HUFFMAN
NORTHSTAR FLOORING
#717.903.7085
megan.huffman@northstarflooring.com
tractorsupply@northstarflooring.com

(RECOMMENDED ONLY)

FIRE SPRINKLER SYSTEMS
KAREN PATRICK, ACCOUNT MANAGER
JCI
#317.710.5137
karen.patrick@jci.com

WASTE AND RECYCLING VENDOR
DIANE HUEFFMEIER, PROGRAM MANAGER
ROCKTENN COMPANY
#314.292.3313
dhueffme@rocktenn.com

SKYLIGHTS
SUSAN FLANAGAN
VELUX COMMERCIAL DAYLIGHTING
#864.813.6896
susan.flanagan@velux.com

RED STRIPING
RICK TOWNE
POP SOLUTIONS GROUP
#901.795.5936 x 19 OFFICE
#901.483.5929 CELL
rtowne@popsolutionsgroup.com

PRINTING
SHERI RYDER
PLAN EXPRESS
#866.404.2614
customerservice@planexpress.net

OXFORD ARCHITECTURE

2934 Sidco Drive
Suite 120
Nashville, TN 37204

Architecture
Planning
Interior Architecture

TRACTOR SUPPLY COMPANY

BOUTTE
LOUISIANA

This drawing and the design shown is the property of the architect. The reproduction, copying or use of this drawing without their written consent is prohibited and any infringement will be subject to legal action

Job Number: 2428

Date: 07.23.2024

Revisions:

Revisions:

Revisions:

TENANT CRITERIA & VENDOR INFORMATION

Sheet Number: A0.0

ADA SIGNAGE

INSTALL RAISED CHARACTER, BRAILLE SIGNS COMPLYING WITH ANSI A117.1 INDICATING, 'EXIT', AT LATCH SIDE OF EACH EXIT DOOR. SEE PLAN FOR EXIT SIGN LOCATIONS.

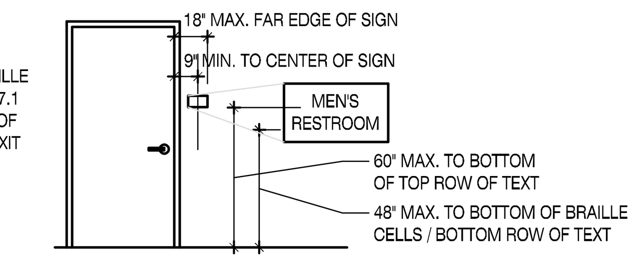

PET WASH STOREFRONT

NOTE: DOOR SHALL HAVE NARROW STILES TO ALLOW FOR A MINIMUM GLAZING WIDTH OF 30.25" FOR DECAL APPLICATION.

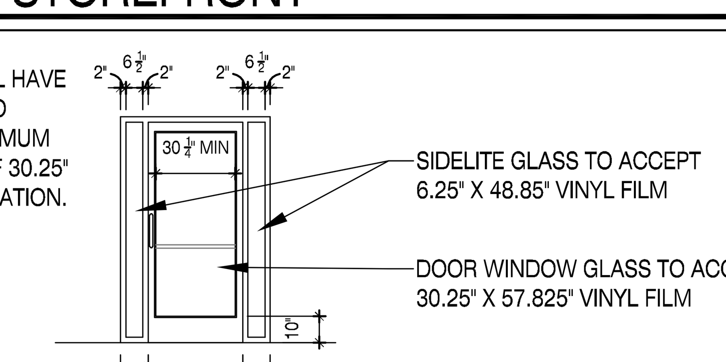

DRAIN MANAGEMENT PROGRAM

PROTO	RETRO	NOTE:
X	X	1. ALL DRAINS, VENTS, ETC. MUST BE TAPED OVER DURING CONSTRUCTION TO PREVENT DEBRIS FROM INFILTRATING THE LINES
X	X	2. GC/DEVELOPER IS REQUIRED TO SUBMIT PHOTOS OF TAPED DRAINS
	X	3. GC WILL BE FINED $150 PER DAY IF PHOTOS ARE NOT SUBMITTED BY THE BEGINNING OF WEEK TWO OF THE PROJECT OR IF ANY DRAIN IS DISCOVERED UNCOVERED DURING A PM SITE VISIT. FINES WILL TERMINATE ON THE DAY THAT PHOTOGRAPHIC EVIDENCE OF COMPLETION IS SUBMITTED TO AND VERIFIED BY THE TRACTOR SUPPLY PM.
X	X	4. GC/DEVELOPER WILL BE REQUIRED TO JET AND CAMERA ANY LINE IN WHICH THE DRAIN IS DISCOVERED UNCOVERED. RECEIPTS AND VIDEO MUST BE SUBMITTED TO TRACTOR SUPPLY FOR VERIFICATION.
X	X	5. DRAIN MANAGEMENT SIGNAGE WILL BE PROVIDED BY TRACTOR SUPPLY AND INSTALLED BY THE GC/DEVELOPER.
X	X	6. IF SIGNAGE IS NOT INSTALLED @ PUNCH, CLEANING/CAMERA POLICY WILL APPLY.
	X	7. GC WILL BE FINED $150 PER DAY IF SIGNAGE IS NOT INSTALLED AT PUNCH. FINES WILL TERMINATE ON THE DAY THAT PHOTOGRAPHIC EVIDENCE OF COMPLETION IS SUBMITTED TO AND VERIFIED BY THE TRACTOR SUPPLY PM.

COLOR SCHEDULE

EXTERIOR BUILDING FINISHES:

CORRUGATED SIDING - 22 GAUGE GALVANIZED CORRUGATED STEEL PANEL - 'MATTE / WEATHERED' FINISH
ROOF AT VESTIBULE GABLE - GALVANIZED STANDING SEAM METAL ROOFING

CONCRETE MASONRY UNITS AND EXTERIOR CONCRETE MOISTURE CONTENT CRITERIA.
GENERAL CONTRACTOR, OR, THE OWNERS TESTING COMPANY SHALL PROVIDE MOISTURE TESTING OF ALL CMU AND CONCRETE EXTERIOR WALL PER ASTM D4263 PRIOR TO APPLICATION OF PAINT. TSC PROJECT MANAGER MUST APPROVE THE APPLICATION OF PAINT IN WRITING, IF THE MOISTURE CONTENT IS ABOVE 15%.

CONCRETE MASONRY UNITS FOR CONVENTIONAL BUILDINGS.
ELASTOMERIC SYSTEM
FLAT FINISH - COLOR TO MATCH SW7513 SANDERLING TO 4'-0" A.F.F., SW7532 URBAN PUTTY FROM 4'-0" A.F.F. TO TOP OF C.M.U. ON ALL SIDES.
1ST COAT: S-W LOXON ACRYLIC BLOCK SURFACER, LX01W0200 (50-100 SQ FT/ GAL @ 16 MILS WET; 8 MILS DRY)
2ND COAT: S-W CONFLEX XL SMOOTH HIGH BUILD ACRYLIC COATING, CF11 SERIES
3RD COAT: S-W CONFLEX XL SMOOTH HIGH BUILD ACRYLIC COATING, CF11 SERIES (16 MILS WET; 7.5 MILS PER DRY COAT) (ACCEPTABLE TOLERANCE IS 9-10 PINHOLES PER SQ. FT.)

NOTE: APPLICATIONS MAY UTILIZE BRUSH, ROLLER OR AIRLESS SPRAYER; **HOWEVER, ALL COATS MUST BE BACK-ROLLED.** SEE SHERWIN WILLIAMS DATA SHEET APPLICATION RECOMMENDATIONS

RED ACCENT STRIPE (CONCRETE MASONRY UNITS)
HIGH GLOSS FINISH - COLOR TO MATCH SW4081 SAFETY RED FROM 10'-0" A.F.F. TO 10'-8" A.F.F., FRONT, LEFT, AND RIGHT SIDES
2 COATS: S-W ACROLON 100, B65R720 PART A SAFETY RED/ B65V720 PART B HARDENER - APPLY AS NEEDED FOR COMPLETE COVERAGE)
APPLY TO EXTERIOR RED STRIPE ONLY - CLEAR COAT GLOSS FINISH - DIAMOND-CLAD WB
3 COMPONENT, LOW VOC WATERBASED ACRYLIC POLYURETHANE CLEAR COAT
DIAMOND-CLAD CLEAR COAT URETHANE GLOSS CLEAR PART A (B65T175)
DIAMOND-CLAD CLEAR COAT URETHANE HARDNER PART B (B65V175)
DIAMOND-CLAD CLEAR COAT URETHANE CATALYST PART C (B65C175)
MIX COMPONENTS PER MANUFACTURERS SPECIFICATIONS COAT ACROLON WITHIN 48 HOURS
RECOMMENDED SPREAD RATE (WET MILS: 2.4-4.8 AND DRY MILS: 1.0-2.0)

RED STRIPE (AROUND VESTIBULE BUMP OUT) - BY POP SOLUTIONS TO MATCH RED STRIPE SW 4081 SAFETY RED

LIGHTING POLE BASES
GLOSS FINISH - COLOR TO BE SW4084 SAFETY YELLOW
1ST COAT: S-W LOXON ACRYLIC BLOCK SURFACER, LX01W0200 (50-100 SQ FT/ GAL @ 16 MILS WET; 8 MILS DRY)
2ND COAT: S-W CONFLEX XL SMOOTH HIGH BUILD ACRYLIC COATING, CF11 SERIES
3RD COAT: S-W CONFLEX XL SMOOTH HIGH BUILD ACRYLIC COATING, CF11 SERIES (APPLY AS NEEDED FOR COMPLETE COVERAGE)
PRODUCT IS PACKAGE SAFETY YELLOW; COLOR ACCEPTANCE SHOULD BE APPROVED BY TSC.

LOADING DOCK GUARDRAILS, HOLLOW METAL DOOR FRAMES, STEEL ROOF LADDER
GLOSS FINISH - COLOR TO MATCH SW1012 POWER GREY
1ST COAT: S-W KEM KROMIK UNIVERSAL METAL PRIMER, B50Z SERIES - OMIT FOR H.M. DOOR FRAMES (6.0 - 8.0 MLS WET / 3.0 -4.0 MLS DRY PER COAT)
2ND COAT: S-W INDUSTRIAL ENAMEL HS, B54Z400 SERIES
3RD COAT: S-W INDUSTRIAL ENAMEL HS, B54Z400 SERIES (2.0 - 4.0 MILS DRY PER COAT) (APPLY AS NEEDED FOR COMPLETE COVERAGE)

HOLLOW METAL DOORS
FACTORY FINISHED SHER-CRYL HPA SW1012 POWER GRAY

PIPE BOLLARDS AND COVERS	6" SCHEDULE 40 CONCRETE FILLED PIPE BOLLARD WITH MCCUE POST COVER CSPC-6-307 (SEE MANUFACTURER FOR BOLLARD SIZES OTHER THAN 6" DIA.) COLOR TO BE STANDARD YELLOW
STOREFRONT	YKK AP SERIES YHS 50 IMPACT RESISTANT CLEAR ANODIZED ALUMINUM STOREFRONT SYSTEM WITH INTEGRATED STRUCTURAL STEEL FRAMING AS REQUIRED FOR WIND LOADS
STOREFRONT GLAZING	IMPACT RESISTANT GLAZING ON EXTERIOR 1" TEMP. INSULATED GREY TINTED GLASS

INTERIOR FINISHES:

MASONRY (CONCRETE, SCORED, SMOOTH, HIGH/LOW DENSITY)
SEMI-GLOSS FINISH - COLOR TO MATCH SW7005 PURE WHITE
1ST COAT: S-W PREPRITE BLOCK FILLER B25W25 (75-125 SQ. FT./GAL @ 16 MILS WET; 8 MILS DRY)
2ND COAT: S-W PROMAR 400 ZERO VOC INTERIOR LATEX SEMI-GLOSS, B31W04651 SERIES
3RD COAT: S-W PROMAR 400 ZERO VOC INTERIOR LATEX SEMI-GLOSS, B31W04651 SERIES (4 MILS WET, 1.3 MILS DRY PER COAT)

NOTE: APPLICATIONS MAY UTILIZE BRUSH, ROLLER OR AIRLESS SPRAYER; **HOWEVER, ALL COATS MUST BE BACK-ROLLED.** SEE SHERWIN WILLIAMS DATA SHEET APPLICATION RECOMMENDATIONS

RED ACCENT STRIPE (IN RETAIL SALES AREA - 10'-3" TO BOTTOM OF STRIPE, 12" STRIPE)
SEMI-GLOSS FINISH - SW 4081 SAFETY RED
1ST COAT: S-W PROMAR 200 ZERO VOC INTERIOR LATEX PRIMER, B28W02600 (4 MILS. WET, 1.2 MILS DRY)
2ND COAT: S-W PROMAR 200 ZERO VOC INTERIOR LATEX SEMI-GLOSS, B31R02658
3RD COAT: S-W PROMAR 200 ZERO VOC INTERIOR LATEX SEMI-GLOSS, B31R02658

NOTE: CONTRACTOR TO ACCESS STANDARD CRITERIA PLANS FOR ALTERNATE PAINT SPECIFICATION BY PPG.

OUTER CORE AREAS DRYWALL AND INTERIOR DRESSING ROOM WALLS (WALLS, GYPSUM BOARD, PLASTER BOARD, ETC.)
SEMI-GLOSS FINISH - COLOR TO MATCH SW7005 PURE WHITE
1ST COAT: S-W PROMAR 200 ZERO VOC INTERIOR LATEX PRIMER, B28W02600 (4 MILS WET, 1.3 MILS DRY PER COAT)
2ND COAT: S-W PROMAR 400 ZERO VOC INTERIOR LATEX SEMI-GLOSS, B31W04651 SERIES
3RD COAT: S-W PROMAR 400 ZERO VOC INTERIOR LATEX SEMI-GLOSS, B31W04651 SERIES (4 MILS WET, 1.3 MILS DRY PER COAT)

OUTER DRESSING ROOM WALLS
1ST COAT: S-W PREPRITE 200 ZERO VOC INTERIOR LATEX PRIMER, B28W02600 (4 MILS WET, 1.3 MILS DRY PER COAT)
TSC TO PROVIDE AND INSTALL WALLPAPER

EXPOSED CONDUIT IN CLOTHING AREA
GC TO PAINT CONDUIT RUST-OLEUM UNIVERSAL HAMMERED ALL SURFACE PAINT + PRIMER BROWN

INNER CORE AREAS
SEMI-GLOSS FINISH - COLOR TO MATCH SW7036 ACCESSIBLE BEIGE
1ST COAT: S-W PROMAR 200 ZERO VOC INTERIOR LATEX PRIMER, B28W02600 (4 MILS WET, 1.3 MILS DRY PER COAT)
2ND COAT: S-W PROMAR 400 ZERO VOC INTERIOR LATEX SEMI-GLOSS, B31W04651 SERIES
3RD COAT: S-W PROMAR 400 ZERO VOC INTERIOR LATEX SEMI-GLOSS, B31W04651 SERIES (4 MILS WET, 1.3 MILS DRY PER COAT)

EXPOSED CONDUIT IN RETAIL SALES AREA
GC TO PAINT CONDUIT TO MATCH WALL FINISH

EXPOSED DECK & JOISTS
PRE-PRIMED GREY PREFERRED OR AS APPROVED BY TRACTOR SUPPLY COMPANY

INTERIOR COLUMNS (METAL)
GLOSS FINISH - COLOR TO MATCH SW1012 POWER GREY
1ST COAT: S-W KEM KROMIK UNIVERSAL METAL PRIMER, B50Z SERIES (6.0 - 8.0 MILS WET / 3.0 - 4.0 MILS DRY PER COAT)
2ND COAT: S-W PROMAR 400 ZERO VOC INTERIOR LATEX SEMI-GLOSS, B31W04651 SERIES
3RD COAT: S-W PROMAR 400 ZERO VOC INTERIOR LATEX SEMI-GLOSS, B31W04651 SERIES (4 MILS WET, 1.3 MILS DRY PER COAT)

EXTERIOR METAL AND INTERIOR WOOD DOORS
COLOR TO MATCH SW1012 POWER GREY
COLOR TO MATCH SW7513 SANDERLING @ DRESSING ROOM DOOR ONLY
1ST COAT: FACTORY PRIMED
REMAINING COATS: FACTORY FINISHED
TOUCH-UP PAINT: PROVIDED BY DH PACE

METAL DOOR FRAMES
GLOSS FINISH - COLOR TO MATCH SW1012 POWER GREY
COLOR TO MATCH SW7513 SANDERLING @ DRESSING ROOM DOOR ONLY
1ST COAT: FACTORY PRIMED
2ND COAT: S-W PROMAR 400 ZERO VOC INTERIOR LATEX SEMI-GLOSS, B31W04651 SERIES
3RD COAT: S-W PROMAR 400 ZERO VOC INTERIOR LATEX SEMI-GLOSS, B31W04651 SERIES (4 MILS WET, 1.3 MILS DRY PER COAT)

METAL DOOR FRAMES - OPTION (HARDER FINISH AND BETTER COLOR/GLOSS RETENTION)
GLOSS FINISH - COLOR TO MATCH SW1012 POWER GREY
COLOR TO MATCH SW7513 SANDERLING @ DRESSING ROOM DOOR ONLY
1ST COAT: FACTORY PRIMED
2ND COAT: S-W PRO INDUSTRIAL WATERBASED ALKYD URETHANE ENAMEL B53W01051 SERIES
3RD COAT: S-W PRO INDUSTRIAL WATERBASED ALKYD URETHANE ENAMEL B53W01051 SERIES (4 MILS WET, 1.6 MILS DRY PER COAT)

VINYL PLANK FLOORING	SWIFF-TRAIN COMPANY EARTHWERKS WOOD CLASSIC IN SENORA GWC 9812 OR NORTH STAR FLOORING SOMA IN RUSSET, SEE TERRITORY MAP A0.0 FOR VENDOR SELECTION
VINYL BASE	JOHNSONITE VINYL #40 BLACK IN ALL SPACES W/ PREFORMED INSIDE AND OUTSIDE CORNERS
PLASTIC LAMINATE	WILSONART 4857-60 SHADOW ZEPHYR AT EMPLOYEE LOUNGE COUNTERTOP PROVIDED BY TSC
TOILET PARTITIONS	GLOBAL INDUSTRIES PLASTIC LAMINATE FLOOR MOUNTED TOILET PARTITIONS TO BE FINISHED WITH WILSONART LAMINATE, 4857-60 SHADOW ZEPHYR OR EQUAL AS REQUIRED BY LOCAL CODE.
FIBERGLASS REINFORCED PANEL (FRP)	WAINSCOT TO 4' A.F.F. ON NON-MASONRY WALLS IN RESTROOMS AND WALLS ADJACENT TO THE WATER FOUNTAIN. SEE DETAILS A5.0 FOR MOP SINK CONDITION & DETAILS A5.1 FOR PET WASH WALL CONDITION. FRP BY GLASTEEL, GLASLINER FRP, COLOR: XA WHITE, FINISH: TEXTURED.
LAY-IN CEILING & GRID (VESTIBULE)	GRID STONE GYPSUM CEILING PANELS 1/2" X 2' X 4'
LAY-IN CEILING & GRID (OFFICE CORE)	ARMSTRONG DUNE 1776 2X4, WHITE, SQUARE LAYIN, OR EQUAL

FLOOR IN VESTIBULE, SALES, RESTROOMS, CORRIDOR, MANAGER'S OFFICE, EMPLOYEE LOUNGE
CONCRETE FLOORING SPECIFICATIONS, PROVIDE THE FOLLOWING:
- ANY FLOOR AREAS OVER 3" ROUND WILL BE PREPPED BY THE "GC".
- MECHANICALLY GROUND AND POLISHED FLOOR SURFACE TO A 400 GRIT RESIN DIAMOND FOLLOWED BY 800 GRIT DIAMOND PAD BURNISH FOR A MID LEVEL GLOSS. INCLUDED IN THIS PROCESS IS CONCRETE DENSIFICATION, JOINT/CRACK FILLING UP TO 1150 LF AND PATCHING OF HOLES SMALLER THAN 3" THAT POSE A TRIP HAZARD. PROCESS TO BE INSTALLED BY FLOORING SUBCONTRACTOR.

FLOOR IN STOCKROOM, IT ROOM
CONCRETE FLOORING SPECIFICATIONS, PROVIDE THE FOLLOWING:
- 1 CUT GRIND THEN SEALED WITH GUARD/ SEALER INSTALLED BY FLOORING SUBCONTRACTOR.

FLOOR IN PET WASH
CONCRETE AND EPOXY FLOORING SPECIFICATIONS, PROVIDE THE FOLLOWING:
- DO NOT BROOM FINISH THIS AREA. PLACE AND FINISH CONCRETE AS SPECIFIED IN SECTION 3.04 "CONCRETE FINISHES AND TOLERANCES", PARAGRAPH A "GENERAL FINISHES". CURE USING "KUREZ DR VOX" OR "KUREZ DR 100" AT AN APPLICATION RATE OF 400 SF/GALLON
- JOINT FILLING: FILL ALL CONTROL JOINTS AS SPECIFIED IN SECTION 3.07 "INTERIOR CONCRETE JOINT FILLER", PARAGRAPH B.
- SURFACE PREPARATION: EPOXY FLOOR COATING SYSTEM IS DESIGNED FOR APPLICATION ON CONCRETE SUBSTRATES. NEWLY PLACED CONCRETE SURFACES SHOULD BE CURED FOR A MINIMUM OF 28 DAYS PRIOR TO COATING. CONCRETE SURFACES MUST BE STRUCTURALLY SOUND, FREE OF LOOSE OR DETERIORATED CONCRETE AND FREE OF DUST, DIRT, PAINT, EFFLORESCENCE, OIL AND OTHER CONTAMINANTS. MECHANICALLY ABRADE THE SURFACE TO ACHIEVE A SURFACE PROFILE EQUAL TO CSP 2-3 IN ACCORDANCE WITH ICRI GUIDELINE 310.2. PROPERLY CLEAN PROFILED AREA. THE pH OF THE SURFACE SHOULD BE CHECKED ACCORDING TO ASTM D 4262. FOLLOWING SURFACE PREPARATION, THE CLEANED SURFACE SHOULD HAVE A MINIMUM SURFACE-TENSILE STRENGTH OF 200 PSI WHEN TESTED WITH AN ELCOMETER OR SIMILAR PULL TESTER (ASTM D 4541).
- INITIAL COAT MIXING: PRE-MIX "INCRETE HIGH PERFORMANCE EPOXY" (GRAY) PART A AND PART B, THEN COMBINE 2 PARTS BY VOLUME OF PART A WITH ONE PART BY VOLUME OF PART B, AND THEN MIX THOROUGHLY USING A LOW-SPEED DRILL MOTOR AND A "JIFFY" TYPE MIXER. MIX ONLY THE AMOUNT OF MATERIAL THAT CAN BE APPLIED DURING THE POT LIFE. DO NOT AERATE THE MIX.
- INITIAL COAT APPLICATION: APPLY "INCRETE HIGH PERFORMANCE EPOXY" (GRAY) AT 120 SF/GALLON. SPREAD THE MIXED EPOXY WITH A NOTCHED SQUEEGEE WHILE WEARING SPIKED SHOES. START FROM ONE END OF THE FLOOR AND WORK BACKWARDS AND SIDEWAYS TRYING TO KEEP A WET-TO-WET EDGE. THE COATING SHOULD THEN BE ROLLED IN ONE DIRECTION USING A 3/8" NAP, SHED-RESISTANT ROLLER. MAKE SURE THE MATERIAL IS APPLIED AS QUICKLY AS POSSIBLE WITHOUT LEAVING PUDDLES.
- PIGMENTED CHIP APPLICATION: BROADCAST UNTIL REFUSAL, "INCRETE GRANITE COAT CHIPS" (MICA) IN A HIGH ARCING MOTION INTO THE WET EPOXY. ALLOW TO CURE. ONCE DRY, VACUUM/SCRAPE OFF EXCESS FLAKES. ALLOW TO DRY.
- GROUT COAT: APPLY "INCRETE HIGH PERFORMANCE EPOXY" (CLEAR) AT 120 SF/GALLON. ALLOW TO DRY.
- WEAR COAT: APPLY A FINAL COAT OF "INCRETE POLYSEAL POLYASPARTIC" (CLEAR) AT 120 SF/GALLON. ALLOW TO DRY.
- COVE BASE: IN ADDITION TO THE SEAMLESS INTEGRAL FLOOR, PROVIDE A 4" COVE BASE FROM THE FLOOR TO THE FRP WALL TRANSITION. COVE BASE SHALL CONSIST OF A MIXTURE OF "INCRETE HIGH PERFORMANCE EPOXY" AND FINELY GRADED, CLEAN DRY , TROWELABLE AGGREGATES, TROWELED TO THE PREVIOUSLY INSTALLED VERTICAL CEMENT BOARD SURFACE, TO A HEIGHT OF 4 INCHES. CREATE A COVED, SEAMLESS, INTEGRAL TRANSITION AT JOINT BETWEEN WALL AND FLOOR. BROADCAST UNTIL REFUSAL, "INCRETE GRANITE COAT CHIPS" (MICA) INTO THE WET EPOXY. FINISH COVE BASE DETAIL WITH THE GROUT COAT AND WEAR COAT AS SPECIFIED HEREIN. ONCE COMPLETED, THE FLOOR AND COVE BASE SHALL BE SEAMLESS IN FUNCTION AND APPEARANCE.

a. INSTALL CEMENT WALL BOARD SO THAT THE BOTTOM EDGE IS FLUSH WITH THE FLOOR AS SPECIFIED.
b. INSTALL CEMENT WALL BOARD TAPE, SIMILAR TO GOLDBLATT PROFESSIONAL CEMENT BOARD TAPE, TO ALL JOINT OF CEMENT BOARD.
c. INSTALL FIBER REINFORCED PANELS (FRP) AS REQUIRED. DO NOT APPLY ADHESIVE TO ANY AREAS CONTACTING THE 4" COVE BASE INSTALLATION. DO NOT APPLY WATER TO ANY OF THESE SURFACES PRIOR TO INSTALLATION OF THE EPOXY FLOOR OR COVE SYSTEM.
d. INSTALL 4" COVE BASE DIRECTLY TO CEMENT BOARD. COVE BASE SHALL COME IN DIRECT CONTACT WITH THE BOTTOM EDGE OF THE FIBER REINFORCED PANELS SO THAT THE FLOOR AND COVE BASE SHALL BE SEAMLESS IN FUNCTION AND APPEARANCE.

DOOR SCHEDULE

MARK	SIZE	TYPE	MATERIAL	FRAME	HARDWARE SET	REMARKS
1	3'-6" X 7'-0"	A	STORE FRONT GLASS	ALUM.	1A	SEE NOTES 10, 13, 14 & 24
2	NOT USED					
3	NOT USED					
4	3'-0" X 5'-8"	H	S.C. WOOD	H. MTL.	4	SEE NOTE 21
5A	PR 3'-0"X7'-0"	B	STORE FRONT GLASS	ALUM.	1C	SEE NOTES 4, 10, 17 & 22
5B	PKG 9'-0" X 7'-8"	A	STORE FRONT GLASS	ALUM.	1A	SEE NOTES 10, 14, 22
6*	PR 3'-0"X8'-0"	D	ALUM. / GLASS	MTL.	2	SEE NOTE 18
7	CASED OPENING					FURR DOWN TO 7'-10" A.F.F.
8	3'-0" X 7'-0"	C	S.C. WOOD	H. MTL.	8	SEE NOTE 5
9	3'-0" X 7'-0"	C	S.C. WOOD	H. MTL.	8	SEE NOTE 5
10	3'-0" X 7'-0"	C	S.C. WOOD	H. MTL.	6	SEE NOTE 16
11	3'-0" X 7'-0"	C	S.C. WOOD	H. MTL.	7	SEE NOTE 16
12	3'-0" X 7'-0"	C	INSUL MTL.	INSUL. MTL.	5	SEE NOTES 2, 3 & 10
13A	10'-0" X 10'-0"	E	INSUL MTL.	MTL.	2	SEE NOTES 1, 12 & 15
13B	10'-0" X 10'-0"	E	INSUL MTL.	MTL.	2	SEE NOTES 1, 12 & 15
14	3'-0" X 7'-0"	G	S.C. WOOD	H. MTL.	6	SEE NOTE 20
15	3'-0" X 7'-0"	C	INSUL MTL.	INSUL. MTL.	5B	SEE NOTES 10 & 11
16	3'-0" X 7'-0"	C	S.C. WOOD	H. MTL.	7	SEE NOTE 16
17	3'-0" X 7'-0"	F	STORE FRONT GLASS	ALUM.	1D	SEE NOTES 4, 10, 19 & 22
18	3'-0" X 3'-0"	C	INSUL MTL.	MTL.		SEE NOTE 23
19	2'-6" X 3'-4"	C	INSUL MTL.	MTL.		SEE NOTE 24

* FRAME SUPPLIED BY TSC, INSTALLED BY CONTRACTOR

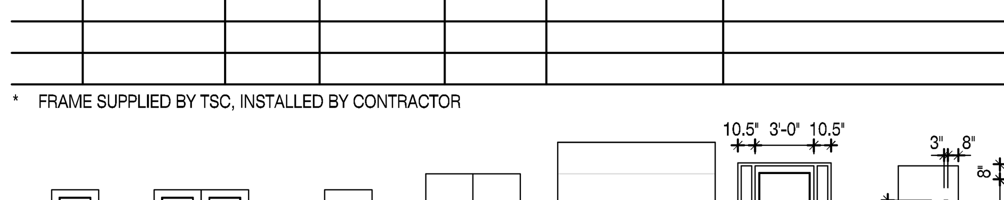

DOOR NOTES

1. 10' WIDE X 10' INSULATED SECTIONAL METAL DOOR W/ ELECTRIC OPERATOR, (2) RADIO REMOTES, TIMER, CHAIN KEEPER AND REVERSING SAFETY EDGE. OVERRIDE BUTTON TO BE SUPPLIED BY OVERHEAD DOOR VENDOR AND INSTALLED BY GENERAL CONTRACTOR'S ELECTRICIAN. COLOR TO BE FACTORY FINISHED WHITE. **DOOR TO BE BE HIGH IMPACT RATED. FL14529-R11.**
2. KEY OUTSIDE.
3. DOOR #12 TO HAVE DOOR BELL. RINGERS TO BE LOCATED @ RECEIVING DESK AND CASH REGISTER. "BIG EYE" VIEWER IN DOOR.
4. DOOR #5A, #17 & #19 TO HAVE 4" ALUM. HEAD AND THRESHOLD.
5. SIGNAGE TO BE PROVIDED BY TSC.
6. NOTE THAT DOORS REQUIRE A MINIMUM 10" BOTTOM RAIL TO RECEIVE KICK PLATES.
7. ALL DOORS TO HAVE A.D.A. APPROVED HARDWARE.
8. GENERAL CONTRACTOR TO CHANGE OUT CONSTRUCTION CORES OF ALL HARDWARE PRIOR TO TURNOVER OF STORE. KEY AND TURNOVER DOCUMENT TO BE SIGNED BY G.C. AND STORE MANAGER.
9. ALL LOCKSETS KEYED TO ESTABLISH TSC GRANDMASTER KEY. ESTABLISH A NEW MASTER KEY AND KEY INDIVIDUALLY AS DIRECTED TO OPERATE ALL CYLINDERS & LOCK SETS. FURNISH (4) COPIES OF THE MASTER KEY, FURNISH 2 KEYS PER LOCK.
10. DOOR #1, #2 , #5A, #5B, #15, #17 & #19 KEYED ALIKE. DOOR #12 KEYED SEPARATELY. **EXTERIOR DOORS TO BE HIGH IMPACT RATED. SEE MATERIAL SCHEDULE AND A2.0 FOR MORE INFORMATION.**
11. ELECTRICIAN RESPONSIBLE FOR MAKING FINAL CONNECTION BETWEEN SECURITY VENDOR WORK AND DOOR WIRING.
12. CONTRACTOR TO INSTALL PLASTIC AIR CURTAIN WITH 50% PANEL OVERLAP @ NEW MASONRY OPENING INSIDE NEW DOOR. AIR CURTAIN INCLUDED WITH OVERHEAD DOOR VENDOR PACKAGE. INCLUDES ALL OVERHEAD DOORS IN RETROFIT STORES.
13. CONTRACTOR TO PROVIDE AND INSTALL DOOR SWEEPS.
14. DOORS TO HAVE FLAT THRESHOLD PROVIDED BY DOOR MANUFACTURER.
15. THE CHANNELS THAT MAKE UP THE JAMBS AND HEAD FOR THE ROLLING SERVICE DOOR AND ITS ATTACHMENT POINTS SHOULD BE FLUSH AND SMOOTH WITH THE SURROUNDING INTERIOR WALLS AS WELL AS ABOVE THE INTERIOR OPENING. PROVIDE A STRUCTURAL SURFACE IN LINE WITH THE JAMBS THAT EXTENDS ABOVE THE OPENING FOR A MINIMUM OF 30" FOR ATTACHMENT POINTS. STRUCTURAL SURFACE TO BE CAPABLE OF WITHSTANDING 1850 LB. POINT FORCE IN EITHER TENSION, COMPRESSION OR SHEAR.
16. PROVIDE AND INSTALL "EMPLOYEES ONLY" SIGN WHERE INDICATED.
17. W/ 2 EACH CRASH RAILS ON INSIDE OF EACH DOOR.
18. 72" X 96", 72" X 84" OR 36" X 96" OPENINGS TO BE PROVIDED AS: P11PLUS, WITH 10" X 30" ADA COMPLIANT WINDOWS, 18" TALL BUMPERS, COLOR: RED. (OR) OPENINGS 96" X 120" TO BE: DURULITE STANDARD DOORS WITH 20" X 30" ADA COMPLIANT WINDOWS, 36" TALL BUMPERS, COLOR: RED.
19. INSTALL CLEAR ANODIZED STOREFRONT FRAMING WITH 1/4" TEMP. CLEAR GLASS SIDELIGHTS. DOOR TO SWING OPEN TO SALES AREA. SIDELIGHT GLASS TO ACCEPT 6.25" X 48.85" VINYL FILM. NARROW STILE DOOR WINDOW GLASS TO ACCEPT 30.25" X 57.825" VINYL FILM.
20. ANEMOSTAT WINDOW KIT WITH CLEAR TEMPERED 1/4" GLASS WITH GLAZING TAPE APPLIED (BOTH SHIPPED LOOSE). BY DH PACE.
21. CONTRACTOR TO PAINT FRAME SW7513 SANDERLING BOTH SIDES.
22. SFIC COMPATIBLE HARDWARE.
23. ACCESS PANEL TO BE SUPPLIED AND INSTALLED BY GC, SEE HARDWARE SCHEDULE FOR SPECIFICATIONS.
24. STANLEY BI-PARTING SLIDING DOOR ENTRY SYSTEM. **DOORS TO BE BE HIGH IMPACT RATED. FL41992-R1.**
25. SOFFIT PANEL TO BE SUPPLIED AND INSTALLED BY GC, SEE HARDWARE SCHEDULE FOR SPECIFICATIONS.

FINISH SCHEDULE

ROOM NO.	ROOM	WALLS	CEILING	BASE	FLOOR	REMARKS
101	NOT USED					
102	RETAIL SALES	PTD. GYP. / C.M.U. (SEMI-GLOSS, WHITE)	EXP. STRUCTURE FACTORY PRIMED (GRAY)	VINYL	POLISHED CONC./ VINYL PLANK	2, 3, 9
103	NOT USED					
104	NOT USED					
105	STOCKROOM	PTD. GYP. / C.M.U. / PLYWOOD (SEMI-GLOSS, WHITE)	EXP. STRUCTURE FACTORY PRIMED (GRAY)	-	POLISHED CONC.	9
106	CORRIDOR	PTD. GYP./ FRP	A.C.T. @ 8'-0" A.F.F.	VINYL	POLISHED CONC.	1, 4, 7, 9
107	MANAGER'S OFFICE	PTD. GYP.	A.C.T. @ 8'-0" A.F.F.	VINYL	POLISHED CONC.	1, 4, 9
108	EMPLOYEE LOUNGE	PTD. GYP.	A.C.T. @ 8'-0" A.F.F.	VINYL	POLISHED CONC.	1, 4, 9
109	MEN	PTD. GYP./C.M.U./ FRP	A.C.T. @ 8'-0" A.F.F.	VINYL	POLISHED CONC.	1, 4, 5, 9
110	WOMEN	PTD. GYP./C.M.U./ FRP	A.C.T. @ 8'-0" A.F.F.	VINYL	POLISHED CONC.	1, 4, 5, 9
111	IT / ELECTRICAL	PTD. C.M.U. / PLYWOOD (SEMI-GLOSS, WHITE) TO DECK	EXP. STRUCTURE FACTORY PRIMED (GRAY)	-	POLISHED CONC.	9
112	PET WASH	FRP / ALUMINUM MESH	ALUMINUM MESH SCREEN @ 10'-0" A.F.F.	EPOXY	EPOXY	

1. CEILING TILE: 2' x 4' X 3/4" MINERAL BOARD, NON-DIRECTIONAL FISSURED, MEDIUM TEXTURE, FLAME RESISTANCE CLASS A, FLAME SPREAD CLASS I
2. VINYL PLANK: EARTHWERKS "WOOD CLASSIC" GWC 9812. DELIVERED BY TSC, SUPPLIED, PURCHASED AND INSTALLED BY CONTRACTOR. BEVELED EDGE VINYL PLANK TO BE USED AT EXPOSED TRANSITION OF VINYL PLANK FLOORING TO CONCRETE.
3. RED ACCENT STRIPE @ 10'-3" FROM FINISH FLOOR TO BOTTOM OF STRIPE -1'-0" STRIPE
4. WALL COLOR TO BE (SW7036 ACCESSIBLE BEIGE). TRIM AND DOORS TO BE (SW1012 POWER GRAY).
5. FRP WAINSCOT TO BE INSTALLED ON ALL NON-MASONRY WALLS 4'-0" A.F.F. COLOR: XA WHITE, FINISH: TEXTURED.
6. GRID STONE GYPSUM CEILING PANELS 1/2" X 2' X 4'
7. FRP WAINSCOT TO BE INSTALLED BEHIND AND ON ALL SIDES OF THE WATER COOLER ALCOVE TO 4'-0" A.F.F. COLOR: XA WHITE, FINISH: TEXTURED.
8. EXTERIOR DRESSING ROOM GYP. WALLS TO BE WALLPAPER PROVIDED AND INSTALLED BY TSC. GYP. WALL CAP AND EXTERIOR WALL EXTENDING ABOVE 9'-0" A.F.F. TO BE PAINTED PURE WHITE W/ RED STRIPE TO MATCH RETAIL SALES WALLS. WALLPAPER TO BE INSTALLED PRIOR TO TURNOVER.
9. GENERAL CONTRACTOR RESPONSIBLE FOR ALL CONCRETE REPLACEMENT, TRENCH POUR BACKS AND FILLING/PATCHING BACK OF HOLES 3" OR LARGER AND IN-GROUND ELECTRICAL BOXES NOT IN USE.

HARDWARE SCHEDULE

SET #	DOORS	QUANTITY	ITEM	MANUFACTURER
1A	1, 5B	1 EA. 1 EA. 1 EA.	MORTISE CYLINDER 28107-1-26D 1CC7A2 (GREEN CONSTRUCTION CORE)-GREEN MORTISE THUMB TURN CYLINDER-26D BALANCE OF HARDWARE BY DOOR SUPPLIER	ILC BEST ILC
1B	NOT USED	2 EA.	DUMMY CYLINDER 7160DC-26D BALANCE OF HARDWARE BY DOOR SUPPLIER	ILC
1C	5A, 19	1 EA. 1 EA. 1 EA.	THUMB TURN -CYLINDER -26D MORTISE CYLINDER 28107-1-26D DRIP CAP 16A X 76 - A BALANCE OF HARDWARE BY DOOR SUPPLIER CLOSER, PARALLEL ARM SC80A-3049PA (DOOR 19 ONLY) PLATE SC80A-18PA (DOOR 19 ONLY)	ILC ILC NAT
1D	17	1 EA. 1 EA. 1 EA.	MORTISE CYLINDER 28107-1-26D DUMMY CYLINDER 7160DC-26D CYLINDER CORE 1CC7A2 (GREEN CONSTRUCTION CORE) BALANCE OF HARDWARE BY DOOR SUPPLIER	ILC ILC BEST
2	6, 13A, 13B		ALL HARDWARE BY DOOR SUPPLIER	
3	NOT USED	3 EA. 1 EA. 1 EA. 1 EA. 3 EA.	HINGES MPB79 4 1/2 X 4 1/2 NRP- 26D SURFACE CLOSER SC81A RW/PA AS SPECIFIED- 689 STOREROOM LOCKSET T581BD X D X 23981145 X 5164 X 1 3/4 WALL STOP WS407 - CCV-US32D SILENCER SR64-GRY	MCK FAL FAL IVE IVE
4	4	1 EA. 1 EA. 3 EA.	CONTINUOUS HINGE 22HD PRIVACY LOCK T301S X D X 23981137 X 5164 X 1 3/4- 626 SILENCER SR64- GRY	MCK FAL IVE
5	12	3 EA. 1 EA. 2 EA. 1 EA. 1 EA. 1 EA. 1 EA. 1 EA. 1 EA. 1 EA.	HINGES MPB79 4 1/2 X 4 1/2 NRP- 26D ALARMED EXIT DEVICE ECL-230D-GRAY RIM CYLINDER R28207-9 SURFACE PULL 8N US28 CLOSER, PARALLEL ARM SC81 A X DS X SLIM-689 THRESHOLD 896V- MILL DOOR BOTTOM 795WH- MILL WEATHERSTRIP 160V - MILL DRIP CAP 16A-A VIEWER U698 B26D (MOUNT 60" CL/A.F.F.) (DOOR 12 ONLY)	MCK DET ILC HAG FAL NAT NAT NAT NAT IVE
5B	15	3 EA. 1 EA, 1 EA. 1 EA. 1 EA. 1 EA. 1 EA. 1 EA.	HINGES MPB79 4 1/2 X 4 1/2 NRP- 26D RIM EXIT DEVICE V40 X DC X EE X TSC- 711 POWER TRANSFER PT5 MORTISE CYLINDER 28107-1-26D CLOSER, PARALLEL ARM SC81A X DS X SLIM-689 THRESHOLD 896 V- MIL WEATHER STRIPING 160V- MILL DRIP CAP 16A-A	MCK DET DET ILC FAL NAT NAT NAT
6	10, 14	3 EA. 1 EA. 1 EA. 1 EA. 1 EA. 3 EA.	HINGES MPB79 4 1/2 X 4 1/2 NRP- 26D PUSH PLATE 8200 X 4 X 16 - US32D PULL PLATE 8302-0 X 4 X 16- US 32D CLOSER SC81A X RW/PA X SLIM-689 WALL STOP WS407-CCV-US32D SILENCERS SR64- GRY	MCK IVE IVE FAL IVE IVE
7	11, 16	3 EA. 1 EA. 1 EA. 1 EA. 3 EA.	HINGES MPB79 4 1/2 X 4 1/2 NRP- 26D OFFICE LOCKSET T511 X D X 23981137 X 5164 X 1 3/4-626 CLOSER SC81A X RW/PA X SLIM-689 (DOOR 11 ONLY) WALL STOP WS407-CCV-US32D SILENCERS SR64- GRY	MCK FAL FAL IVE IVE
8	8, 9	3 EA. 1 EA. 1 EA. 1 EA. 3 EA.	HINGES MPB79 4 1/2 X 4 1/2 NRP- 26D PRIVACY LOCKSET T301S X D 23981137 X 5164 X 1 3/4 -626 CLOSER SC81A X RW/PA X SLIM-689 WALL STOP WS407-CCV- US32D SILENCERS SR64-GRY	MCK FAL FAL IVE IVE
GABLE FACADE ACCESS PANEL		1 EA. 1 EA. 1 EA. 1 EA.	ACCESS PANEL BXTM-36X36-C DUMMY CYLINDER 7160DC-26D CYLINDER CORE 1CC7A2 (GREEN CONSTRUCTION CORE) BALANCE OF HARDWARE BY DOOR SUPPLIER	BAB ILC ILC BEST
SOFFIT ACCESS PANEL		1 EA. 1 EA. 1 EA. 1 EA.	ACCESS PANEL BXTM-30X42 DUMMY CYLINDER 7160DC-26D CYLINDER CORE 1CC7A2 (GREEN CONSTRUCTION CORE) BALANCE OF HARDWARE BY DOOR SUPPLIER	BAB ILC ILC BEST

* IF SECONDARY EXIT IS REQUIRED IN STOCKROOM ALARMED EXIT DEVICE ECL-230D-GRAY IS TO BE INSTALLED.
ALL LOCKSETS WILL BE FURNISHED CONSTRUCTION KEYED. AT THE END OF THE CONSTRUCTION PERIOD NEW PERMANENT CORES BY INSTAKEY WILL BE FURNISHED TO THE CONTRACTOR WHO WILL THEN CHANGE THEM OUT AND RETURN THE CONSTRUCTION CORES TO THE SUPPLIER.
THERE WILL BE A SEALED CARTON WITH THE SHIPMENT. THE CONTRACTOR IS TO TURN THAT SEALED CARTON OVER TO THE TSC STORE MANAGER AND GET THEIR SIGNATURE ON THE ENCLOSED RECEIPT. FORWARD THAT RECEIPT ALONG WITH THE CONSTRUCTION CORES AND CONTROL KEYS TO THE SUPPLIER "DH PACE".
THE ITEMS IN THE SEALED CARTON ARE FOR FUTURE STORE OPERATIONS AND ARE NOT CONSTRUCTION RELATED.

NOTE: TRACTOR SUPPLY COMPANY HAS A NATIONAL ACCOUNT WITH DH PACE FOR DOOR HARDWARE.
CONTACT: CHARLES GIRTMAN @ TSCDOORS@DHPACE.COM OR #816.221.0543

OXFORD ARCHITECTURE
2934 Sidco Drive
Suite 120
Nashville, TN 37204
Architecture
Planning
Interior Architecture

TRACTOR SUPPLY COMPANY
BOUTTE
LOUISIANA

This drawing and the design shown is the property of the architect. The reproduction, copying or use of this drawing without their written consent is prohibited and any infringement will be subject to legal action

Job Number: 2428
Date: 07.23.2024
Revisions:
Revisions:
Revisions:
DOOR & FINISH SCHEDULES
Sheet Number: A0.1

ACCESSIBILITY STANDARDS

CHAPTER 3: BUILDING BLOCKS

302 - FLOOR OR GROUND SURFACES

302.2 CARPET . CARPET OR CARPET TILE SHALL BE SECURELY ATTACHED AND SHALL HAVE A FIRM CUSHION, PAD, OR BACKING OR NO CUSHION OR PAD. CARPET OR CARPET TILE SHALL HAVE A LEVEL LOOP, TEXTURED LOOP, LEVEL CUT PILE, OR LEVEL CUT/UNCUT PILE TEXTURE.

PILE HEIGHT SHALL BE 1/2 INCH (13 MM) MAXIMUM. EXPOSED EDGES OF CARPET SHALL BE FASTENED TO FLOOR SURFACES AND SHALL HAVE TRIM ON THE ENTIRE LENGTH OF THE EXPOSED EXPOSED EDGE. CARPET EDGE TRIM SHALL COMPLY WITH 303.

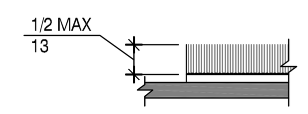

FIGURE 302.2 CARPET PILE HEIGHT

302.3 OPENINGS. OPENINGS IN FLOOR OR GROUND SURFACES SHALL NOT ALLOW PASSAGE OF A SPHERE MORE THAN 1/2 INCH (13 MM) DIAMETER EXCEPT AS ALLOWED IN 407.4.3, 409.4.3, 410.4, 810.5.3 AND 810.10. ELONGATED OPENINGS SHALL BE PLACED SO THAT THE LONG DIMENSION IS PERPENDICULAR TO THE DOMINANT DIRECTION OF TRAVEL.

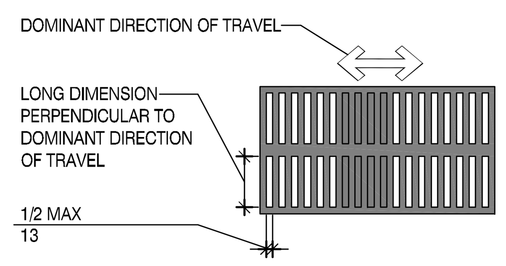

FIGURE 302.3 ELONGATED OPENINGS IN FLOOR OR GROUND SURFACES

303.2 VERTICAL. CHANGES IN LEVEL OF 1/4 INCH (6.4 MM) HIGH MAXIMUM SHALL BE PERMITTED TO BE VERTICAL.

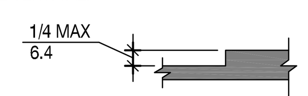

FIGURE 303.2 VERTICAL CHANGE IN LEVEL

303.3 BEVELED. CHANGES IN LEVEL BETWEEN 1/4 INCH (6.4 MM) HIGH MINIMUM AND 1/2 INCH (13 MM) HIGH MAXIMUM SHALL BE BEVELED WITH A SLOPE NOT STEEPER THAN 1:2.

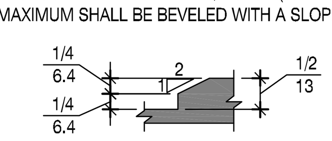

FIGURE 303.3 BEVELED CHANGE IN LEVEL

304 TURNING SPACE

304.3.1 CIRCULAR SPACE. THE TURNING SPACE SHALL BE A SPACE OF 60 INCHES (1525 MM) DIAMETER MINIMUM. THE SPACE SHALL BE PERMITTED TO INCLUDE KNEE AND TOE CLEARANCE COMPLYING WITH 306.

304.3.2 T-SHAPED SPACE. THE TURNING SPACE SHALL BE A T-SHAPED SPACE WITHIN A 60 INCH (1525 MM) SQUARE MINIMUM WITH ARMS AND BASE 36 INCHES (915 MM) WIDE MINIMUM. EACH ARM OF THE T SHALL BE CLEAR OF OBSTRUCTIONS 12 INCHES (305 MM) MINIMUM IN EACH DIRECTION AND THE BASE SHALL BE CLEAR OF OBSTRUCTIONS 24 INCHES (610 MM) MINIMUM. THE SPACE SHALL BE PERMITTED TO INCLUDE KNEE AND TOE CLEARANCE COMPLYING WITH 306 ONLY AT THE END OF EITHER THE BASE OR ONE ARM.

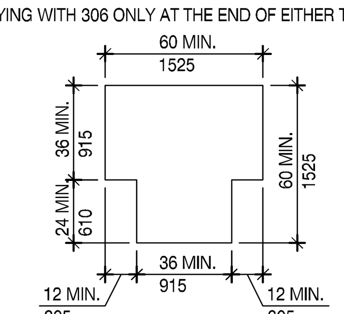

FIGURE 304.3.2 T-SHAPED TURNING SPACE

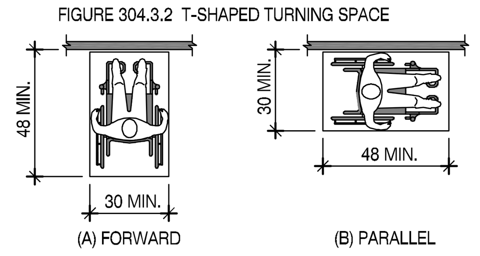

FIGURE 305.5 POSITION OF CLEAR FLOOR OR GROUND SPACE

305.7.1 FORWARD APPROACH . ALCOVES SHALL BE 36 INCHES (915 MM) WIDE MINIMUM WHERE THE DEPTH EXCEEDS 24 INCHES (610 MM).

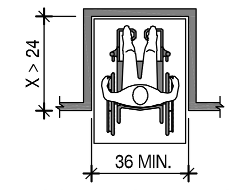

FIGURE 305.7.1 MANEUVERING CLEARANCE IN AN ALCOVE, FORWARD APPROACH

305.7.2 PARALLEL APPROACH. ALCOVES SHALL BE 60 INCHES (1525 MM) WIDE MINIMUM WHERE THE DEPTH EXCEEDS 15 INCHES (380 MM).

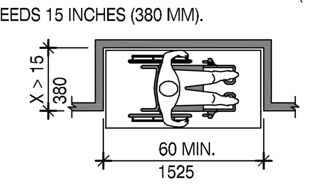

FIGURE 305.7.2 MANEUVERING CLEARANCE IN AN ALCOVE PARALLEL APPROACH

306 KNEE AND TOE CLEARANCE

306.2 TOE CLEARANCE

306.2.1 GENERAL. SPACE UNDER AN ELEMENT BETWEEN THE FINISH FLOOR OR GROUND AND 9 INCHES (230 MM) ABOVE THE FINISH FLOOR OR GROUND SHALL BE CONSIDERED TOE CLEARANCE AND SHALL COMPLY WITH 306.2.

306.2.2 MAXIMUM DEPTH. TOE CLEARANCE SHALL EXTEND 25 INCHES (635 MM) MAXIMUM UNDER AN ELEMENT.

306.2.3 MINIMUM REQUIRED DEPTH. WHERE TOE CLEARANCE IS REQUIRED AT AN ELEMENT AS PART OF A CLEAR FLOOR SPACE, THE TOE CLEARANCE SHALL EXTEND 17 INCHES (430 MM) MINIMUM UNDER THE ELEMENT.

306.2.4 ADDITIONAL CLEARANCE. SPACE EXTENDING GREATER THAN 6 INCHES (150 MM) BEYOND THE AVAILABLE KNEE CLEARANCE AT 9 INCHES (230 MM) ABOVE THE FINISH FLOOR OR GROUND SHALL NOT BE CONSIDERED TOE CLEARANCE

306.2.5 WIDTH. TOE CLEARANCE SHALL BE 30 INCHES (760 MM) WIDE MINIMUM.

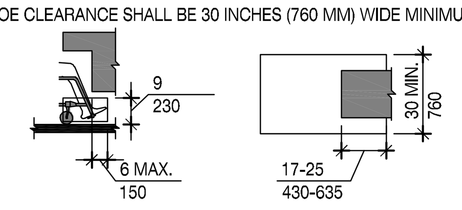

FIGURE 306.2 TOE CLEARANCE

306.3 KNEE CLEARANCE

306.3.1 GENERAL. SPACE UNDER AN ELEMENT BETWEEN 9 INCHES (230 MM) AND 27 INCHES (685 MM) ABOVE THE FINISH FLOOR OR GROUND SHALLL BE CONSIDERED KNEE CLEARANCE AND SHALL COMPLY WITH 306.3.

306.3.2 MAXIMUM DEPTH. KNEE CLEARANCE SHALL EXTEND 25 INCHES (635 MM) MAXIMUM UNDER AN ELEMENT AT 9 INCHES (230 MM) ABOVE THE FINISH FLOOR OR GROUND.

306.3.3 MINIMUM REQUIRED DEPTH. WHERE KNEE CLEARANCE IS REQUIRED UNDER AN ELEMENT AS PART OF A CLEAR FLOOR SPACE, THE KNEE CLEARANCE SHALL BE 11 INCHES (280 MM) DEEP MINIMUM AT 9 INCHES (230 MM) ABOVE THE FINISH FLOOR OR GROUND, AND 8 INCHES (205 MM) DEEP MINIMUM AT 27 INCHES (685 MM) ABOVE THE FINISH FLOOR OR GROUND.

306.3.4 CLEARANCE REDUCTION. BETWEEN 9 INCHES (230 MM) AND 27 INCHES (685 MM) ABOVE THE FINISH FLOOR OR GROUND, THE KNEE CLEARANCE SHALL BE PERMITTED TO REDUCE AT A RATE OF 1 INCH (25 MM) IN DEPTH FOR EACH 6 INCHES (150 MM) IN HEIGHT.

306.3.5 WIDTH. KNEE CLEARANCE SHALL BE 30 INCHES (760 MM) WIDE MINIMUM.

307 PROTRUDING OBJECTS

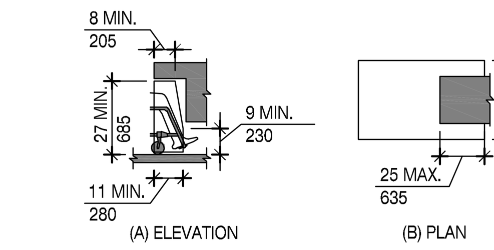

FIGURE 306.3 KNEE CLEARANCE

307.2 PROTRUSION LIMITS. OBJECTS WITH LEADING EDGES MORE THAN 27 INCHES (685 MM) AND NOT MORE THAN 80 INCHES (2030 MM) ABOVE THE FINISH FLOOR OR GROUND SHALL PROTRUDE 4 INCHES (100 MM) MAXIMUM HORIZONTALLY INTO THE CIRCULATION PATH.

EXCEPTION: HANDRAILS SHALL BE PERMITTED TO PROTRUDE 4 ½ INCHES (115 MM) MAXIMUM.

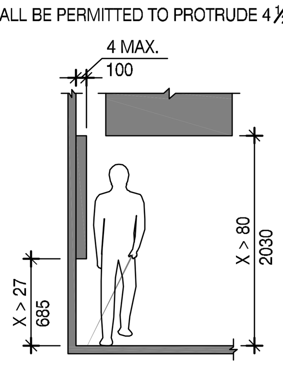

FIGURE 307.2 LIMITS OF PROTRUDING OBJECTS

307.4 VERTICAL CLEARANCE. VERTICAL CLEARANCE SHALL BE 80 INCHES (2030 MM) HIGH MINIMUM. GUARDRAILS OR OTHER BARRIERS SHALL BE PROVIDED WHERE THE VERTICAL CLEARANCE IS LESS THAN 80 INCHES (2030 MM) HIGH. THE LEADING EDGE OF SUCH GUARDRAIL OR BARRIER SHALL BE LOCATED 27 INCHES (685 MM) MAXIMUM ABOVE THE FINISH FLOOR OR GROUND.

EXCEPTION: DOOR CLOSERS AND DOOR STOPS SHALL BE PERMITTED TO BE 78 INCHES (1980 MM) MINIMUM ABOVE THE FINISH FLOOR OR GROUND.

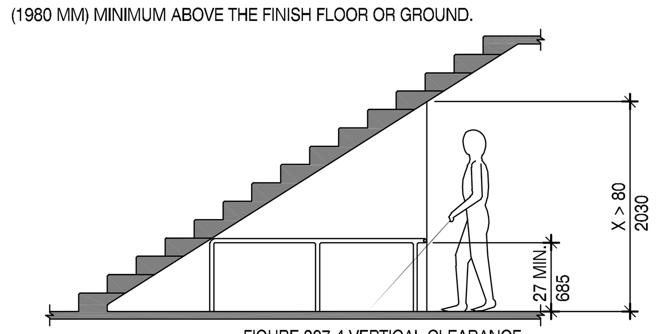

FIGURE 307.4 VERTICAL CLEARANCE

308.2 FORWARD REACH

308.2.1 UNOBSTRUCTED. WHERE A FORWARD REACH IS UNOBSTRUCTED, THE HIGH FORWARD REACH SHALL BE 48 INCHES (1220 MM) MAXIMUM AND THE LOW FORWARD REACH SHALL BE 15 INCHES (380 MM) MINIMUM ABOVE THE FINISH FLOOR OR GROUND.

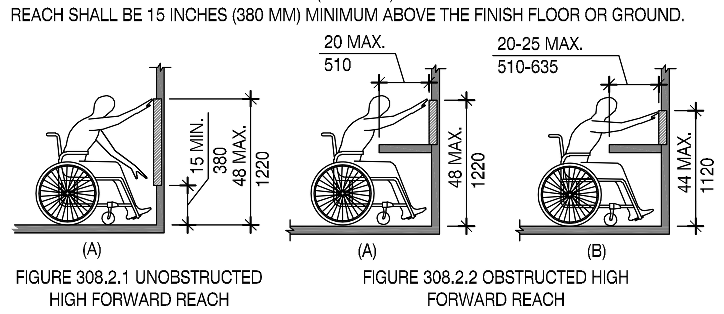

FIGURE 308.2.1 UNOBSTRUCTED HIGH FORWARD REACH

FIGURE 308.2.2 OBSTRUCTED HIGH FORWARD REACH

308.2.2 OBSTRUCTED HIGH REACH. WHERE A HIGH FORWARD REACH IS OVER AN OBSTRUCTION, THE CLEAR FLOOR SPACE SHALL EXTEND BENEATH THE ELEMENT FOR A DISTANCE NOT LESS THAN REQUIRED REACH DEPTH OVER THE OBSTRUCTION. THE HIGH FORWARD REACH SHALL BE 48 INCHES (1220 MM) MAXIMUM WHERE THE REACH DEPTH IS 20 INCHES (510 MM) MAXIMUM. WHERE THE REACH DEPTH EXCEEDS 20 INCHES (510 MM), THE HIGH FORWARD REACH SHALL BE 44 INCHES (1120 MM) MAXIMUM AND THE REACH DEPTH SHALL BE 25 INCHES (635 MM) MAXIMUM.

308.3 SIDE REACH

308.3.1 UNOBSTRUCTED. WHERE A CLEAR FLOOR OR GROUND SPACE ALLOWS A PARALLEL APPROACH TO AN ELEMENT AND THE SIDE REACH IS UNOBSTRUCTED, THE HIGH SIDE REACH SHALL BE 48 INCHES (1220 MM) MAXIMUM AND THE LOW SIDE REACH SHALL BE 15 INCHES (380 MM) MINIMUM ABOVE THE FINISH FLOOR OR GROUND.

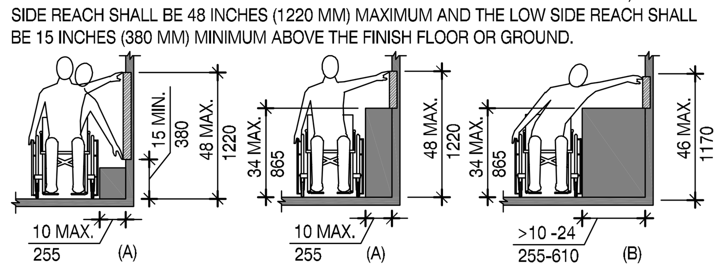

FIGURE 308.3.1 UNOBSTRUCTED SIDE REACH

FIGURE 308.3.2 OBSTRUCTED HIGH SIDE REACH

308.3.2 OBSTRUCTED HIGH REACH. WHERE A CLEAR FLOOR OR GROUND SPACE ALLOWS A PARALLEL APPROACH TO AN ELEMENT AND THE HIGH SIDE REACH IS OVER AN OBSTRUCTION, THE HEIGHT OF THE OBSTRUCTION SHALL BE 34 INCHES (865 MM) MAXIMUM AND THE DEPTH OF THE OBSTRUCTION SHALL BE 24 INCHES (610 MM) MAXIMUM. THE HIGH SIDE REACH SHALL BE 48 INCHES (1220 MM) MAXIMUM FOR A REACH DEPTH OF 10 INCHES (255 MM) MAXIMUM. WHERE THE REACH DEPTH EXCEEDS 10 INCHES (255 MM), THE HIGH SIDE REACH SHALL BE 46 INCHES (1170 MM) MAXIMUM FOR A REACH DEPTH OF 24 INCHES (610 MM) MAXIMUM.

309 OPERABLE PARTS

309.2 CLEAR FLOOR SPACE. A CLEAR FLOOR OR GROUND SPACE COMPLYING WITH 305 SHALL BE PROVIDED.

309.3 HEIGHT. OPERABLE PARTS SHALL BE PLACED WITHIN ONE OR MORE OF THE REACH RANGES SPECIFIED IN 308.

309.4 OPERATION. OPERABLE PARTS SHALL BE OPERABLE WITH ONE HAND AND SHALL NOT REQUIRE TIGHT GRASPING, PINCHING, OR TWISTING OF THE WRIST. THE FORCE REQUIRED TO ACTIVATE OPERABLE PARTS SHALL BE 5 POUNDS (22. 2 N) MAXIMUM.

CHAPTER 4 : ACCESSIBLE ROUTES

402.2 COMPONENTS. ACCESSIBLE ROUTES SHALL CONSIST OF ONE OR MORE OF THE FOLLOWING COMPONENTS: WALKING SURFACES WITH A RUNNING SLOPE NOT STEEPER THAN 1:20, DOORWAYS, RAMPS, CURB RAMPS EXCLUDING THE FLARED SIDES, ELEVATORS, AND PLATFORM LIFTS. ALL COMPONENTS OF AN ACCESSIBLE ROUTE SHALL COMPLY WITH THE APPLICABLE REQUIREMENTS OF CHAPTER 4.

ADVISORY 402.2 COMPONENTS. WALKING SURFACES MUST HAVE RUNNING SLOPES NOT STEEPER THAN 1:20, SEE 403.3. OTHER COMPONENTS OF ACCESSIBLE ROUTES, SUCH AS RAMP (405) AND CURB RAMPS (406), ARE PERMITTED TO BE MORE STEEPLY SLOPED.

403 WALKING SURFACES

403.1 GENERAL. WALKING SURFACES THAT ARE A PART OF AN ACCESSIBLE ROUTE SHALL COMPLY WITH 403.

403.2 FLOOR OR GROUND SURFACE. FLOOR OR GROUND SURFACE SHALL COMPLY WITH 302.

403.3 SLOPE. THE RUNNING SLOPE OF WALKING SURFACES SHALL NOT BE STEEPER THAN 1:20. THE CROSS SLOPE OF WALKING SURFACES SHALL NOT BE STEEPER THAN 1:48.

403.4 CHANGE IN LEVEL. CHANGES IN LEVEL SHALL COMPLY WITH 303.

403.5 CLEARANCES. WALKING SURFACE SHALL PROVIDE CLEARANCES COMPLYING WITH 403.5.

EXCEPTION : WITHIN EMPLOYEE WORK AREAS, CLEARANCES ON COMMON USE CIRCULATION PATHS SHALL BE PERMITTED TO BE DECREASED BY WORK AREA EQUIPMENT PROVIDED THAT THE DECREASE IS ESSENTIAL TO THE FUNCTION OF THE WORK BEING PERFORMED.

403.5.1 CLEAR WIDTH. EXCEPT AS PROVIDED IN 403.5.2 AND 403.5.3, THE CLEAR WIDTH OF WALKING SURFACES SHALL BE 36 INCHES (915 MM) MINIMUM.

EXCEPTION : THE CLEAR WIDTH SHALL BE PERMITTED TO BE REDUCED TO 32 INCHES (815 MM) MINIMUM FOR A LENGTH OF 24 INCHES (610 MM) MAXIMUM PROVIDED THAT REDUCED WIDTH SEGMENTS ARE SEPARATED BY SEGMENTS THAT ARE 48 INCHES (1220 MM) LONG MINIMUM AND 36 INCHES (915 MM) WIDE MINIMUM.

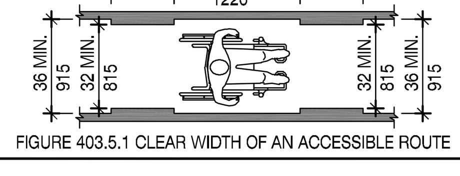

FIGURE 403.5.1 CLEAR WIDTH OF AN ACCESSIBLE ROUTE

403.5.2 CLEAR WIDTH AT TURN. WHERE THE ACCESSIBLE ROUTE MAKES A 180 DEGREE TURN AROUND AN ELEMENT WHICH IS LESS THAN 48 INCHES (1220MM) WIDE, CLEAR WIDTH SHALL BE 42 INCHES (1065 MM) MINIMUM APPROACHING THE TURN, 48 INCHES (1220 MM) MINIMUM AT THE TURN AND 42 INCHES (1065 MM) MINIMUM LEAVING THE TURN.

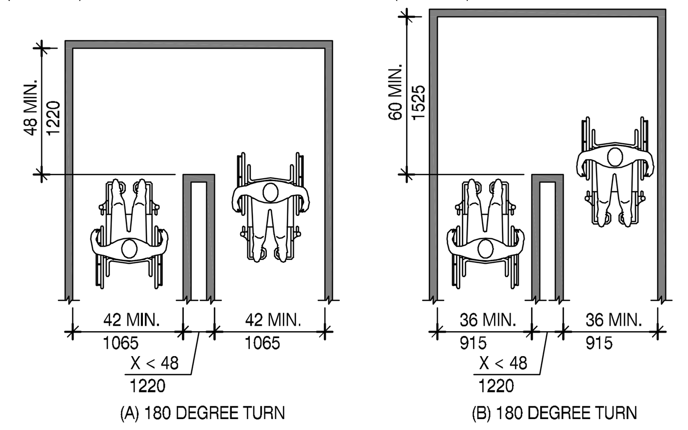

FIGURE 403.5.2 CLEAR WIDTH AT TURN

403.5.3 PASSING SPACES. AN ACCESSIBLE ROUTE WITH A CLEAR WIDTH LESS THAN 60 INCHES (1525 MM) SHALL PROVIDE PASSING SPACES AT INTERVALS AT 200 FEET (61 M) MAXIMUM.

404 DOORS, DOORWAYS, AND GATES

404.2.3 CLEAR WIDTH. DOOR OPENINGS SHALL PROVIDE A CLEAR WIDTH OF 32 INCHES (815 MM) MINIMUM. CLEAR OPENINGS OF DOORWAYS WITH SWINGING DOORS SHALL BE MEASURED BETWEEN THE FACE OF THE DOOR AND THE STOP, WITH THE DOOR OPEN 90 DEGREES, OPENINGS MORE THAN 24 INCHES (610 MM) DEEP SHALL PROVIDE A CLEAR OPENING OF 36 INCHES (915 MM) MINIMUM. THERE SHALL BE NO PROJECTIONS INTO THE REQUIRED CLEAR OPENING WIDTH LOWER THAN 34 INCHES (865 MM) ABOVE THE FINISH FLOOR OR GROUND. PROJECTIONS INTO THE CLEAR OPENING WIDTH BETWEEN 34 INCHES (865 MM) AND 80 INCHES (2030 MM) ABOVE THE FINISH FLOOR OR GROUND SHALL NOT EXCEED 4 INCHES (100 MM).

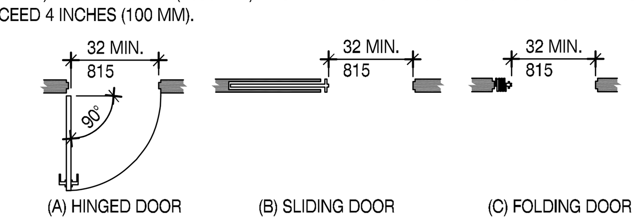

FIGURE 404.2.3 CLEAR WIDTH OF DOORWAYS

404.2.4 MANEUVERING CLEARANCES. MINIMUM MANEUVERING CLEARANCES AT DOORS AND GATES SHALL COMPLY WITH 404.2.4. MANEUVERING CLEARANCES SHALL EXTEND THE FULL WIDTH OF THE DOORWAY AND THE REQUIRED LATCH OR HINGE SIDE CLEARANCE.

404.2.4.3 RECESSED DOORS AND GATES. MANEUVERING CLEARANCES FOR FORWARD APPROACH SHALL BE PROVIDED WHEN ANY OBSTRUCTION WITHIN 18 INCHES (455 MM) OF THE LATCH SIDE OF A DOORWAY PROJECTS MORE THAN 8 INCHES (205 MM) BEYOND THE FACE OF THE DOOR, MEASURED PERPENDICULAR TO THE FACE OF THE DOOR OR GATE.

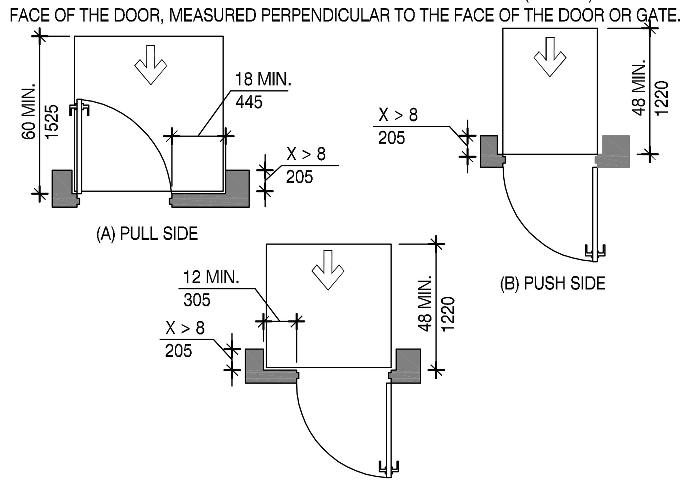

FIGURE 404.2.4.3 MANEUVERING CLEARANCES AT RECESSED DOORS AND GATES

404.2.6 DOORS IN SERIES AND GATES IN SERIES, THE DISTANCE BETWEEN TWO HINGED OR PIVOTED DOORS IN SERIES AND GATES IN SERIES SHALL BE 48 INCHES (1220 MM) MINIMUM PLUS THE WIDTH OF DOORS OR GATES SWINGING INTO THE SPACE.

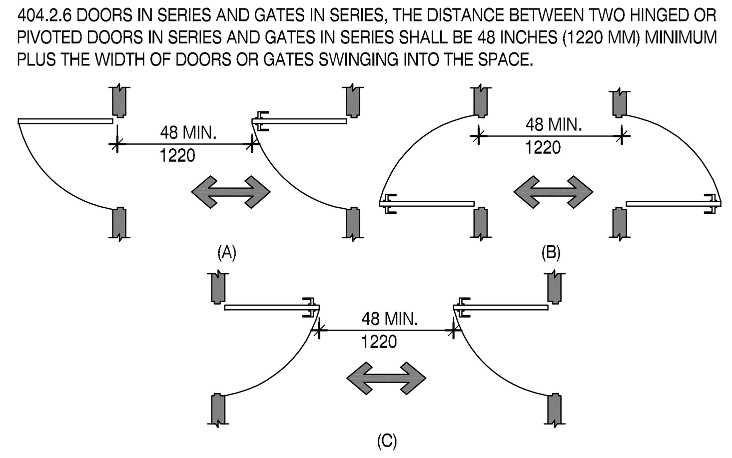

FIGURE 404.2.4.6 DOORS IN SERIES AND GATES IN SERIES

404.2.7 DOOR AND GATE HARDWARE. HANDLES, PULLS, LATCHES, LOCKS, AND OTHER OPERABLE PARTS ON DOORS AND GATES SHALL COMPLY WITH 309.4. OPERABLE PARTS OF SUCH HARDWARE SHALL BE 34 INCHES (865 MM) MINIMUM AND 48 INCHES (1220 MM) MAXIMUM ABOVE THE FINISH FLOOR OR GROUND. WHERE SLIDING DOORS ARE IN THE FULLY OPEN POSITION, OPERATING HARDWARE SHALL BE EXPOSED AND USABLE FROM BOTH SIDES.

404.2.8.1 DOOR CLOSERS AND GATE CLOSERS. DOOR CLOSERS AND GATE CLOSERS SHALL BE ADJUSTED SO THAT FROM AN OPEN POSITION OF 90 DEGREES, THE TIME REQUIRED TO MOVE THE DOOR TO A POSITION OF 12 DEGREES FROM THE LATCH IS 5 SECONDS MINIMUM.

404.2.8.2 SPRING HINGES. DOOR AND GATE SPRING HINGES SHALL BE ADJUSTED SO THAT FROM THE OPEN POSITION OF 70 DEGREES, THE DOOR OR GATE SHALL MOVED TO THE CLOSED POSITION IN 1.5 SECONDS MINIMUM.

404.2.9 DOOR AND GATE OPENING FORCE. FIRE DOORS SHALL HAVE A MINIMUM OPENING FORCE ALLOWABLE BY THE APPROPRIATE ADMINISTRATIVE AUTHORITY. THE FORCE FOR PUSHING OR PULLING OPEN A DOOR OR GATE OTHER THAN FIRE DOORS SHALL BE AS FOLLOWS:

1. INTERIOR HINGED DOORS AND GATES: 5 POUNDS (22.2. N) MAXIMUM.
2. SLIDING OR FOLDING DOORS: 5 POUNDS (22.2 N) MAXIMUM.

THESE FORCES DO NOT APPLY TO THE FORCE REQUIRED TO RETRACT LATCH BOLTS OR DISENGAGE OTHER DEVICES THAT HOLD THE DOOR OR GATE IN A CLOSED POSITION.

404.2.10 DOOR AND GATE SURFACES. SWINGING DOOR AND GATE SURFACES WITHIN 10 INCHES (255 MM) OF THE FINISH FLOOR OR GROUND MEASURED VERTICALLY SHALL HAVE A SMOOTH SURFACE ON THE PUSH SIDE EXTENDING THE FULL WIDTH OF THE DOOR OR GATE. PARTS CREATING HORIZONTAL OR VERTICAL JOINTS IN THESE SURFACE SHALL BE WITHIN $\frac{1}{16}$ INCH (1.6 MM) OF THE SAME PLANE AS THE OTHER. CAVITIES CREATED BY ADDED KICK PLATES SHALL BE CAPPED

404.2.11 VISION LIGHTS. DOORS, GATES, AND SIDE LIGHTS ADJACENT TO DOORS OR GATES, CONTAINING ONE OR MORE GLAZING PANELS THAT PERMIT VIEWING THROUGH THE PANELS SHALL HAVE THE BOTTOM OF AT LEAST ONE GLAZED PANEL LOCATED 43 INCHES (1090 MM) MAXIMUM ABOVE THE FINISH FLOOR.

404.3 AUTOMATIC AND POWER-ASSISTED DOORS AND GATES. AUTOMATIC DOORS AND AUTOMATIC GATES SHALL COMPLY WITH 404.3. FULL-POWERED AUTOMATIC DOORS SHALL COMPLY WITH ANSI/BHMA A156.10 (INCORPORATED BY REFERENCE, SEE "REFERENCED STANDARDS" IN CHAPTER 1). LOW-ENERGY AND POWER-ASSISTED DOORS SHALL COMPLY WITH ANSI/BHMA A156.19 (1997 OR 2002 EDITION) (INCORPORATED BY REFERENCE, SEE "REFERENCED STANDARDS" IN CHAPTER 1),

404.3.2 MANEUVERING CLEARANCE. CLEARANCES AT POWER-ASSISTED DOORS AND GATES SHALL COMPLY WITH 404.2.4. CLEARANCES AT AUTOMATIC DOORS AND GATES WITHOUT STANDBY POWER AND SERVING AN ACCESSIBLE MEANS OF EGRESS SHALL COMPLY WITH 404.2.4.

404.3.7 REVOLVING DOORS. REVOLVING GATES, AND TURNSTILES. REVOLVING DOORS, REVOLVING GATES, AND TURNSTILES SHALL NOT BE A PART OF AN ACCESSIBLE ROUTE.

CHAPTER 6 : PLUMBING ELEMENTS AND FACILITIES

602 DRINKING FOUNTAINS

602.2 CLEAR FLOOR SPACES. UNITS SHALL HAVE A CLEAR FLOOR OR GROUND SPACE COMPLYING WITH 305 POSITIONED FOR A FORWARD APPROACH AND CENTERED ON THE UNIT. KNEE AND TOE CLEARANCE COMPLYING WITH 306 SHALL BE PROVIDED.

EXCEPTION: A PARALLEL APPROACH COMPLYING WITH 305 SHALL BE PERMITTED AT UNITS FOR CHILDREN'S USE WHERE THE SPOUT IS 30 INCHES (760 MM) MAXIMUM ABOVE THE FINISH FLOOR OR GROUND AND IS 3 ½ INCHES (90 MM) MINIMUM FROM THE FRONT EDGE OF THE UNIT, INCLUDING BUMPERS.

602.3 OPERABLE PARTS. OPERABLE PARTS SHALL COMPLY WITH 309.

602.4 SPOUT HEIGHTS. SPOUT OUTLETS SHALL BE 36 INCHES (915 MM) MAXIMUM ABOVE THE FINISH FLOOR OR GROUND.

602.5 SPOUT LOCATION. THE SPOUT SHALL BE LOCATED 15 INCHES (380 MM) MINIMUM FROM THE VERTICAL SUPPORT AND 5 INCHES (125 MM) MAXIMUM FROM THE FRONT EDGE OF THE UNIT, INCLUDING BUMPERS.

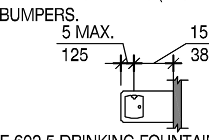

FIGURE 602.5 DRINKING FOUNTAIN SPOUT LOCATION

602.6 WATER FLOW. THE SPOUT SHALL PROVIDE A FLOW OF WATER 4 INCHES (100 MM) HIGH MINIMUM AND SHALL BE LOCATED 5 INCHES (125 MM) MAXIMUM FROM THE FRONT FACE OF THE UNIT. THE ANGLE OF THE WATER STREAM SHALL BE MEASURED HORIZONTALLY RELATIVE TO THE FRONT FACE OF THE UNIT. WHERE SPOUTS ARE LOCATED LESS THAN 3 INCHES (75 MM) OF THE FRONT OF THE UNIT, ANGLE OF THE WATER STREAM SHALL BE 30 DEGREE MAXIMUM. WHERE SPOUTS ARE LOCATED BETWEEN 3 INCHES (75 MM) AND 5 INCHES (125 MM) MAXIMUM FROM THE FRONT OF THE UNIT, THE ANGLE OF THE WATER STREAM SHALL BE 15 DEGREES MAXIMUM.

602.7 DRINKING FOUNTAINS FOR STANDING PERSON. SPOUT OUTLETS OF DRINKING FOUNTAINS FOR STANDING PERSONS SHALL BE 38 INCHES (965 MM) MINIMUM AND 43 INCHES (1090 MM) MAXIMUM ABOVE THE FINISH FLOOR OR GROUND.

603 TOILET AND BATHING ROOMS

603.2 CLEARANCE. CLEARANCES SHALL COMPLY WITH 603.2

603.2.1 TURNING SPACE. TURNING SPACE COMPLYING WITH 304 SHALL BE PROVIDED WITHIN THE ROOM.

603.2.2 OVERLAP. REQUIRED CLEAR FLOOR SPACES, CLEARANCE AT FIXTURES, AND TURNING SPACE SHALL BE PERMITTED TO OVERLAP.

603.2.3 DOOR SWING. DOORS SHALL NOT SWING INTO THE CLEAR FLOOR SPACE OR CLEARANCE REQUIRED FOR ANY FIXTURE. DOORS SHALL BE PERMITTED TO SWING INTO THE REQUIRED TURNING SPACE.

603.3 MIRRORS. MIRRORS LOCATED ABOVE LAVATORIES OR COUNTERTOPS SHALL BE INSTALLED WITH THE BOTTOM EDGE OF THE REFLECTING SURFACE 40 INCHES (1015 MM) MAXIMUM ABOVE THE FINISH FLOOR OR GROUND. MIRRORS NOT LOCATED ABOVE LAVATORIES OR COUNTERTOPS SHALL BE INSTALLED WITH THE BOTTOM EDGE OF THE REFLECTING SURFACE 35 INCHES (890 MM) MAXIMUM ABOVE THE FINISH FLOOR OR GROUND.

603.4 COAT HOOKS AND SHELVES. COAT HOOKS SHALL BE LOCATED WITHIN ONE OF THE REACH RANGES SPECIFIED IN 308. SHELVES SHALL BE LOCATED 40 INCHES (1015 MM) MINIMUM AND 48 INCHES (1220 MM) MAXIMUM ABOVE THE FINISH FLOOR.

604 WATER CLOSETS AND TOILET COMPARTMENTS

604.2 LOCATION. THE WATER CLOSET SHALL BE POSITIONED WITH A WALL OR PARTITION TO THE REAR AND TO ONE SIDE. THE CENTERLINE OF THE WATER CLOSET SHALL BE 16 INCHES (405 MM) MINIMUM TO 18 INCHES (455 MM) MAXIMUM FROM THE SIDE WALL OR PARTITION, EXCEPT THAT THE WATER CLOSET SHALL BE 17 INCHES (430 MM) MINIMUM AND 19 INCHES (485 MM) MAXIMUM FROM THE SIDE WALL OR PARTITION IN THE AMBULATORY ACCESSIBLE TOILET COMPARTMENT SPECIFIED IN 604.8.2. WATER CLOSETS SHALL BE ARRANGED FOR A LEFT- HAND OR RIGHT- HAND APPROACH.

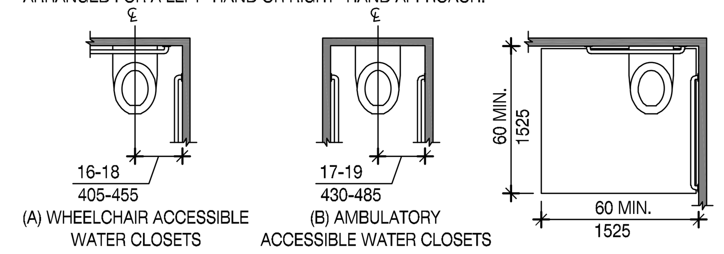

FIGURE 604.2 LOCATION AT WATER CLOSETS

FIGURE 604.3.1 SIZE OF CLEARANCE AT WATER CLOSETS

604.3.1 SIZE. CLEARANCE AROUND A WATER CLOSET SHALL BE 60 INCHES (1525 MM) MINIMUM MEASURED PERPENDICULAR FROM THE SIDE WALL AND 60 INCHES (1525 MM) MINIMUM MEASURED PERPENDICULAR FROM THE REAR WALL.

604.3.2 OVERLAP. THE REQUIRED CLEARANCE AROUND THE WATER CLOSET SHALL BE PERMITTED TO OVERLAP THE WATER CLOSET, ASSOCIATED GRAB BARS, DISPENSERS, SANITARY NAPKIN DISPOSAL UNITS, COAT HOOKS, SHELVES, ACCESSIBLE ROUTES, CLEAR FLOOR SPACE AND CLEARANCES REQUIRED AT OTHER FIXTURES, AND THE TURNING SPACE. NO OTHER FIXTURES OR OBSTRUCTIONS SHALL BE LOCATED WITHIN THE REQUIRED WATER CLOSET CLEARANCE.

604.4 SEATS. THE SEAT HEIGHT OF A WATER CLOSET ABOVE THE FINISH FLOOR SHALL BE 17 INCHES (430 MM) MINIMUM AND 19 INCHES (485 MM) MAXIMUM MEASURED TO THE TOP OF THE SEAT. SEATS SHALL NOT BE SPRUNG TO RETURN TO A LIFTED POSITION.

604.5 GRAB BARS. GRAB BARS FOR WATER CLOSETS SHALL COMPLY WITH 609. GRAB BARS SHALL BE PROVIDED ON THE SIDE WALL CLOSEST TO THE WATER CLOSET AND ON THE REAR WALL.

604.5.1 SIDE WALL. THE SIDE WALL GRAB BAR SHALL BE 42 INCHES (1065 MM) LONG MINIMUM, LOCATED 12 INCHES (305 MM) MAXIMUM FROM THE REAR WALL AND EXTENDING 54 INCHES (1370 MM) MINIMUM FROM THE REAR WALL.

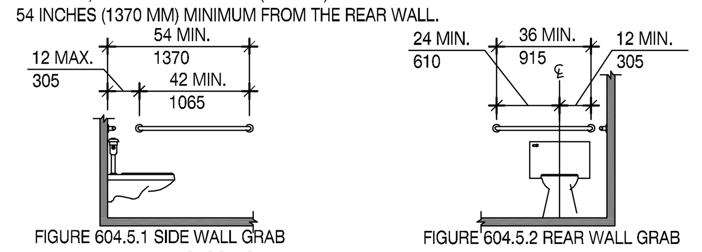

FIGURE 604.5.1 SIDE WALL GRAB BAR AT WATER CLOSETS

FIGURE 604.5.2 REAR WALL GRAB BAR AT WATER CLOSETS

604.5.2 REAR WALL. THE REAR WALL GRAB BAR SHALL BE 36 INCHES (915 MM) LONG MINIMUM AND EXTEND FROM THE CENTERLINE OF THE WATER CLOSET 12 INCHES (305 MM) MINIMUM ON ONE SIDE AND 24 INCHES (610 MM) MINIMUM ON THE OTHER SIDE.

604.6 FLUSH CONTROLS. FLUSH CONTROLS SHALL BE HAND OPERATED OR AUTOMATIC. HAND OPERATED FLUSH CONTROLS SHALL COMPLY WITH 309. FLUSH CONTROLS SHALL BE LOCATED ON THE OPEN SIDE OF THE WATER CLOSET EXCEPT IN AMBULATORY ACCESSIBLE COMPARTMENTS COMPLYING WITH 604.8.2

604.7 DISPENSERS. TOILET PAPER DISPENSERS SHALL COMPLY WITH 309.4 AND SHALL BE 7 INCHES (180 MM) MINIMUM AND 9 INCHES (230 MM) MAXIMUM IN FRONT OF THE WATER CLOSET MEASURED TO THE CENTERLINE OF THE DISPENSER. THE OUTLET OF THE DISPENSER SHALL BE 15 INCHES (380 MM) MINIMUM AND 48 INCHES (1220 MM) MAXIMUM ABOVE THE FINISH FLOOR AND SHALL NOT BE LOCATED BEHIND GRAB BARS. DISPENSERS SHALL NOT BE OF A TYPE THAT CONTROLS DELIVERY OR THAT DOES NOT ALLOW CONTINUOUS PAPER FLOW.

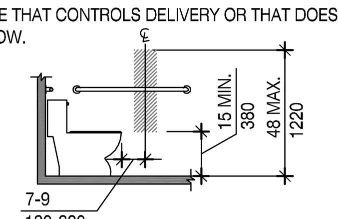

FIGURE 604.7 DISPENSER OUTLET LOCATION

604.8 TOILET COMPARTMENTS. WHEELCHAIR ACCESSIBLE TOILET COMPARTMENTS SHALL MEET THE REQUIREMENTS OF 604.8.1 AND 604.8.3. COMPARTMENTS CONTAINING MORE THAN ONE PLUMBING FIXTURE SHALL COMPLY WITH 603. AMBULATORY ACCESSIBLE COMPARTMENTS SHALL COMPLY WITH 604.8.2 AND 604.8.3.

604.8.1 WHEELCHAIR ACCESSIBLE COMPARTMENTS. WHEELCHAIR ACCESSIBLE COMPARTMENTS SHALL COMPLY WITH 604.8.1

604.8.1.1 SIZE. WHEELCHAIR ACCESSIBLE COMPARTMENTS SHALL BE 60 INCHES (1525 MM) WIDE MINIMUM MEASURED PERPENDICULAR TO THE SIDE WALL, AND 56 INCHES (1420 MM) DEEP MINIMUM FOR WALL HUNG WATER CLOSETS AND 59 INCHES (1500 MM) DEEP MINIMUM FOR FLOOR MOUNTED WATER CLOSETS MEASURED PERPENDICULAR TO THE REAR WALL. WHEELCHAIR ACCESSIBLE COMPARTMENTS FOR CHILDREN'S USE SHALL BE 60 INCHES (1525 MM) WIDE MINIMUM MEASURED PERPENDICULAR TO THE SIDE WALL, AND 59 INCHES (1500 MM) DEEP MINIMUM FOR WALL HUNG AND FLOOR MOUNTED WATER CLOSETS MEASURED PERPENDICULAR TO THE REAR WALL.

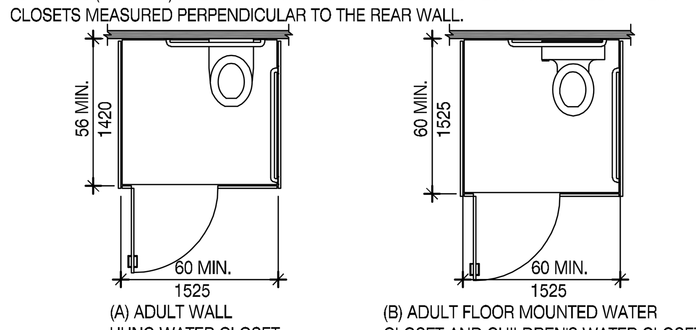

FIGURE 604.8.1.1 SIZE OF WHEELCHAIR ACCESSIBLE TOILET COMPARTMENTS

604.8.1.2 DOORS. TOILET COMPARTMENT DOORS, INCLUDING DOOR HARDWARE, SHALL COMPLY WITH 404 EXCEPT THAT IF THE APPROACH IS TO THE LATCH SIDE OF THE COMPARTMENT DOOR, CLEARANCE BETWEEN THE DOOR SIDE OF THE COMPARTMENT AND ANY OBSTRUCTION SHALL BE 42 INCHES (1065 MM) MINIMUM. DOORS SHALL BE LOCATED IN THE FRONT PARTITION OR IN THE SIDE WALL OR PARTITION FARTHEST FROM THE WATER CLOSET. WHERE LOCATED IN THE FRONT PARTITION, THE DOOR OPENING SHALL BE 4 INCHES (100 MM) MAXIMUM FROM THE SIDE WALL OR PARTITION FARTHEST FROM THE WATER CLOSET. WHERE LOCATED IN THE SIDE WALL OR PARTITION, THE DOOR OPENING SHALL BE 4 INCHES (100 MM) MAXIMUM FROM THE FRONT PARTITION. THE DOOR SHALL BE SELF-CLOSING. A DOOR PULL COMPLYING WITH 404.2.7 SHALL BE PLACED ON BOTH SIDES OF THE DOOR NEAR THE LATCH. TOILET COMPARTMENT DOORS SHALL NOT SWING INTO THE MINIMUM REQUIRED COMPARTMENT AREA.

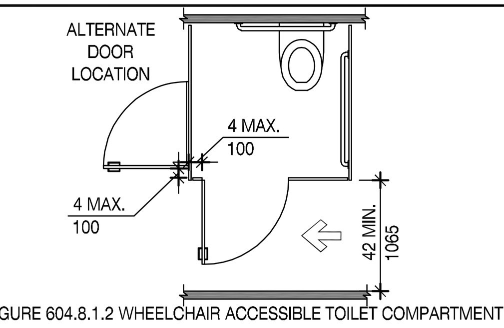

FIGURE 604.8.1.2 WHEELCHAIR ACCESSIBLE TOILET COMPARTMENT DOORS

604.8.1.3 APPROACH. COMPARTMENTS SHALL BE ARRANGED FOR LEFT- HAND OR RIGHT- HAND APPROACH TO THE WATER CLOSET.

604.8.1.4 TOE CLEARANCE. THE FRONT PARTITION AND AT LEAST ONE SIDE PARTITION SHALL PROVIDE A TOE CLEARANCE OF 9 INCHES (230 MM) MINIMUM ABOVE THE FINISH FLOOR AND 6 INCHES (150 MM) DEEP MINIMUM BEYOND THE COMPARTMENT - SIDE FACE OF THE PARTITION, EXCLUSIVE OF PARTITION SUPPORT MEMBERS. COMPARTMENTS FOR CHILDREN'S USE SHALL PROVIDE A TOE CLEARANCE OF 12 INCHES (305 MM) MINIMUM ABOVE THE FINISH FLOOR.

EXCEPTION: TOE CLEARANCE AT THE FRONT PARTITION IS NOT REQUIRED IN A COMPARTMENT GREATER THAN 62 INCHES (1575 MM) DEEP WITH A WALL - HUNG WATER CLOSET OR 65 INCHES (1650 MM) DEEP WITH A FLOOR - MOUNTED WATER CLOSET. TOE CLEARANCE AT THE SIDE PARTITION IS NOT REQUIRED IN A COMPARTMENT GREATER THAN 66 INCHES (1675 MM) WIDE. TOE CLEARANCE AT THE FRONT PARTITION IS NOT REQUIRED IN A COMPARTMENT FOR CHILDREN'S USE THAT IS GREATER THAN 65 INCHES (1650 MM) DEEP.

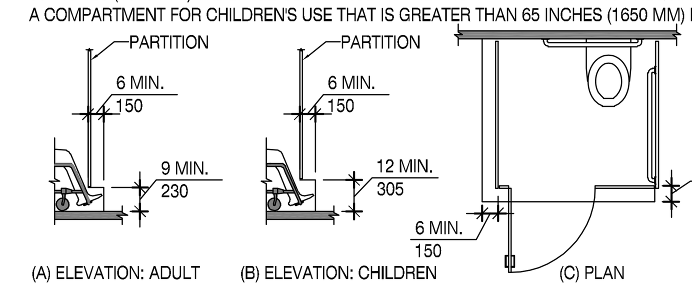

FIGURE 604.8.1.4 WHEELCHAIR ACCESSIBLE TOILET COMPARTMENT TOE CLEARANCE

604.8.1.5 GRAB BARS. GRAB BARS SHALL COMPLY WITH 609. A SIDE-WALL GRAB BAR COMPLYING WITH 604.5.1 SHALL BE PROVIDED AND SHALL BE LOCATED ON THE WALL CLOSEST TO THE WATER CLOSET. IN ADDITION, A REAR-WALL GRAB BAR COMPLYING WITH 604.5.2 SHALL BE PROVIDED.

604.8.1.2 AMBULATORY ACCESSIBLE COMPARTMENTS. AMBULATORY ACCESSIBLE COMPARTMENTS SHALL COMPLY WITH 604.8.2.

604.8.1.2.1 SIZE. AMBULATORY ACCESSIBLE COMPARTMENTS SHALL HAVE A DEPTH OF 60 INCHES (1525 MM) MINIMUM AND A WIDTH OF 35 INCHES (890 MM) MINIMUM AND 37 INCHES (940 MM) MAXIMUM.

604.8.2.2 DOORS. TOILET COMPARTMENT DOORS, INCLUDING DOOR HARDWARE, SHALL COMPLY WITH 404, EXCEPT THAT IF THE APPROACH IS TO THE LATCH SIDE OF THE COMPARTMENT DOOR, CLEARANCE BETWEEN THE DOOR SIDE OF THE COMPARTMENT AND ANY OBSTRUCTION SHALL BE 42 INCHES (1065 MM) MINIMUM. THE DOOR SHALL BE SELF-CLOSING. A DOOR PULL COMPLYING WITH 404.2.7 SHALL BE PLACED ON BOTH SIDES OF THE DOOR NEAR THE LATCH. TOILET COMPARTMENT DOORS SHALL NOT SWING INTO THE MINIMUM REQUIRED COMPARTMENT AREA.

604.8.2.3 GRAB BARS. GRAB BARS SHALL COMPLY WITH 609. A SIDE - WALL GRAB BAR COMPLYING WITH 604.5.1 SHALL BE PROVIDED ON BOTH SIDE OF THE COMPARTMENT.

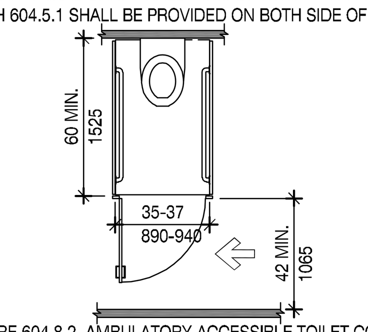

FIGURE 604.8.2 AMBULATORY ACCESSIBLE TOILET COMPARTMENT

604.8.3 COAT HOOKS AND SHELVES. COAT HOOKS SHALL BE LOCATED WITHIN ONE OF THE REACH RANGES SPECIFIED IN 308. SHELVES SHALL BE LOCATED 40 INCHES (1015 MM) MINIMUM AND 48 INCHES (1220MM) MAXIMUM ABOVE THE FINISH FLOOR.

604.9 WATER CLOSETS AND TOILET COMPARTMENTS FOR CHILDREN'S USE. WATER CLOSETS AND TOILET COMPARTMENTS FOR CHILDREN'S USE SHALL COMPLY WITH 604.9.

604.9.1 LOCATION. THE WATER CLOSET SHALL BE LOCATED WITH A WALL OR PARTITION TO THE REAR AND TO ONE SIDE. THE CENTERLINE OF THE WATER CLOSET SHALL BE 12 INCHES (305 MM) MINIMUM AND 18 INCHES (455 MM) MAXIMUM FROM THE SIDE WALL OR PARTITION, EXCEPT THAT THE WATER CLOSET SHALL BE 17 INCHES (430 MM) MINIMUM AND 19 INCHES (485 MM) MAXIMUM FROM THE SIDE WALL OR PARTITION IN THE AMBULATORY ACCESSIBLE TOILET COMPARTMENT SPECIFIED IN 604.8.2. COMPARTMENTS SHALL BE ARRANGED FOR LEFT-HAND OR RIGHT-HAND APPROACH TO THE WATER CLOSET.

604.9.2 CLEARANCE. CLEARANCE AROUND A WATER CLOSET SHALL COMPLY WITH 604.3.

604.9.3 HEIGHT. THE HEIGHT OF WATER CLOSETS SHALL BE 11 INCHES (280 MM) MINIMUM AND 17 INCHES (430 MM) MAXIMUM MEASURED TO THE TOP OF THE SEAT. SEATS SHALL NOT BE SPRUNG TO RETURN TO A LIFTED POSITION.

604.9.4 GRAB BARS. GRAB BARS FOR WATER CLOSETS SHALL COMPLY WITH 604.5.

604.9.5 FLUSH CONTROLS. FLUSH CONTROLS SHALL BE HAND OPERATED OR AUTOMATIC. HAND OPERATED FLUSH CONTROLS SHALL COMPLY WITH 309.2 AND 309.4 AND SHALL BE INSTALLED 36 INCHES (915 MM) MAXIMUM ABOVE THE FINISH FLOOR. FLUSH CONTROLS SHALL BE LOCATED ON THE OPEN SIDE OF THE WATER CLOSET EXCEPT IN AMBULATORY ACCESSIBLE COMPARTMENTS COMPLYING WITH 604.8.2.

604.9.6 DISPENSERS. TOILET PAPER DISPENSERS SHALL COMPLY WITH 309.4 AND SHALL BE 7 INCHES (180 MM) MINIMUM AND 9 INCHES (230 MM) MAXIMUM IN FRONT OF THE WATER CLOSET MEASURED TO THE CENTERLINE OF THE DISPENSER. THE OUTLET OF THE DISPENSER SHALL BE 14 INCHES (355 MM) MINIMUM AND 19 INCHES (485 MM) MAXIMUM ABOVE THE FINISH FLOOR. THERE SHALL BE A CLEARANCE OF 1 ½ INCHES (38 MM) MINIMUM BELOW THE GRAB BAR. DISPENSERS SHALL NOT BE OF A TYPE THAT CONTROLS DELIVERY OR THAT DOES NOT ALLOW CONTINUOUS PAPER FLOW.

604.9.7 TOILET COMPARTMENTS. TOILET COMPARTMENTS SHALL COMPLY 604.8.

605 URINALS

605.2 HEIGHT AND DEPTH. URINALS SHALL BE THE STALL-TYPE OR THE WALL-HUNG TYPE WITH THE RIM 17INCHES (430 MM) MAXIMUM ABOVE THE FINISH FLOOR OR GROUND. URINALS SHALL BE 13 ½ INCHES (345 MM) DEEP MINIMUM MEASURED FROM THE OUTER FACE OF THE URINAL RIM TO THE BACK OF THE FIXTURE.

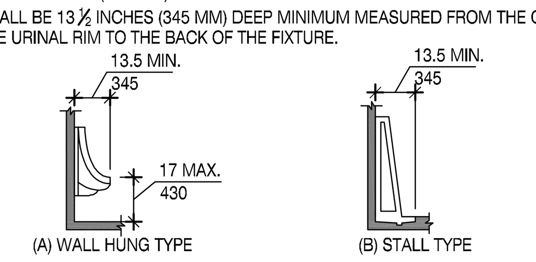

FIGURE 605.2 HEIGHT AND DEPTH OF URINALS

605.3 CLEAR FLOOR SPACE. A CLEAR FLOOR OR GROUND SPACE COMPLYING WITH 305 POSITIONED FOR FORWARD APPROACH SHALL BE PROVIDED.

605.4 FLUSH CONTROLS. FLUSH CONTROLS SHALL BE HAND OPERATED OR AUTOMATIC. HAND OPERATED FLUSH CONTROLS SHALL COMPLY WITH 309.

606 LAVATORIES AND SINKS

606.2 CLEAR FLOOR SPACE. A CLEAR FLOOR SPACE COMPLYING WITH 305, POSITIONED FOR A FORWARD APPROACH , AND KNEE AND TOE CLEARANCE COMPLYING WITH 306 SHALL BE PROVIDED.

606.3 HEIGHT. LAVATORIES AND SINKS SHALL BE INSTALLED WITH THE FRONT OF THE HIGHER OF THE RIM OR COUNTER SURFACE 34 INCHES (865 MM) MAXIMUM ABOVE THE FINISH FLOOR OR GROUND.

606.4 FAUCETS. CONTROLS FOR FAUCETS SHALL COMPLY WITH 309. HAND-OPERATED METERING FAUCETS SHALL REMAIN OPEN FOR 10 SECONDS MINIMUM.

606.5 EXPOSED PIPES AND SURFACES. WATER SUPPLY AND DRAIN PIPES UNDER LAVATORIES AND SINKS SHALL BE INSULATED OR OTHERWISE CONFIGURED TO PROTECT AGAINST CONTACT. THERE SHALL BE NO SHARP OR ABRASIVE SURFACES UNDER LAVATORIES AND SINKS.

CHAPTER 7: COMMUNICATION ELEMENTS AND FEATURES

702 FIRE ALARM SYSTEMS

702.1 GENERAL. FIRE ALARM SYSTEMS SHALL HAVE PERMANENTLY INSTALLED AUDIBLE AND VISIBLE ALARMS COMPLYING WITH NFPA 72 (1999 OR 2002 EDITION) (INCORPORATED BY REFERENCE, SEE "REFERENCED STANDARDS" IN CHAPTER 1), EXCEPT THAT THE MAXIMUM ALLOWABLE SOUND LEVEL OF AUDIBLE NOTIFICATION APPLIANCES COMPLYING WITH SECTION 4-3.2.1 OF NFPA 72 (1999 EDITION) SHALL HAVE A SOUND LEVEL NO MORE THAN 110 DB AT THE MINIMUM HEARING DISTANCE FROM THE AUDIBLE APPLIANCE. IN ADDITION, ALARMS IN GUEST ROOMS REQUIRED TO PROVIDE COMMUNICATION FEATURES SHALL COMPLY WITH SECTIONS 4-3 AND 4-4 OF NFPA 72 (1999 EDITION) OR SECTIONS 7.4 AND 7.5 OF NFPA 72 (2002 EDITION).

703 SIGNS

703.1 GENERAL. SIGNS SHALL COMPLY WITH 703. WHERE BOTH VISUAL AND TACTILE CHARACTERS ARE REQUIRED, EITHER ONE SIGN WITH BOTH VISUAL AND TACTILE CHARACTERS OR TWO SEPARATE SIGNS, ONE WITH VISUAL AND ONE WITH TACTILE CHARACTERS, SHALL BE PROVIDED.

703.2 RAISED CHARACTERS. RAISED CHARACTERS SHALL COMPLY WITH 703.2 AND SHALL BE DUPLICATED IN BRAILLE COMPLYING WITH 703.3. RAISED CHARACTERS SHALL BE INSTALLED IN ACCORDANCE WITH 703.4.

703.2.1 DEPTH. RAISED CHARACTERS SHALL BE 1/32 INCH (0.8 MM) MINIMUM ABOVE THEIR BACKGROUND.

703.2.2 CASE. CHARACTERS SHALL BE UPPERCASE.

703.2.3 STYLE. CHARACTERS SHALL BE SANS SERIF. CHARACTERS SHALL NOT BE ITALIC, OBLIQUE, SCRIPT, HIGHLY DECORATIVE, OR OF OTHER UNUSUAL FORMS.

703.2.4 CHARACTER PROPORTIONS. CHARACTERS SHALL BE SELECTED FROM FONTS WHERE THE WIDTH OF THE UPPERCASE LETTER "0" IS 55 PERCENT MINIMUM AND 110 PERCENT MAXIMUM OF THE HEIGHT OF THE UPPERCASE LETTER "I".

703.2.5 CHARACTER HEIGHT. CHARACTER HEIGHT MEASURED VERTICALLY FROM THE BASELINE OF THE CHARACTER SHALL BE 5/8 INCH (16MM) MINIMUM AND 2 INCHES (51 MM) MAXIMUM BASED ON THE HEIGHT OF THE UPPERCASE LETTER "I".

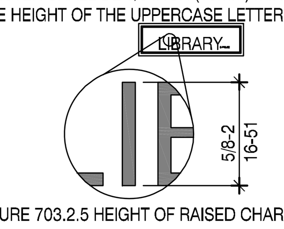

FIGURE 703.2.5 HEIGHT OF RAISED CHARACTERS

703.2.6 STROKE THICKNESS. STROKE THICKNESS OF THE UPPERCASE LETTER "I" SHALL BE 15 PERCENT MAXIMUM OF THE HEIGHT OF THE CHARACTER.

703.2.7 CHARACTER SPACING. CHARACTER SPACING SHALL BE MEASURED BETWEEN THE TWO CLOSEST POINTS OF ADJACENT RAISED CHARACTERS WITHIN A MESSAGE, EXCLUDING WORD SPACES. WHERE CHARACTERS HAVE RECTANGULAR CROSS SECTIONS, SPACING BETWEEN INDIVIDUAL RAISED CHARACTERS SHALL BE 1/8 INCH (3.2 MM) MINIMUM AND 4 TIMES THE RAISED CHARACTER STROKE WIDTH MAXIMUM. WHERE CHARACTERS HAVE OTHER CROSS SECTIONS, SPACING BETWEEN INDIVIDUAL RAISED CHARACTERS SHALL BE 1/16 INCH (1.6 MM) MINIMUM AND 4 TIMES THE RAISED CHARACTER STROKE WIDTH MAXIMUM AT THE BASE OF THE CROSS SECTIONS, AND 1/8 INCH (3.2 MM) MINIMUM AND 4 TIMES THE RAISED CHARACTER STROKE WIDTH MAXIMUM AT THE TOP OF THE CROSS SECTIONS. CHARACTERS SHALL BE SEPARATED FROM RAISED BORDERS AND DECORATIVE ELEMENTS 3/8 INCH (9.5 MM) MINIMUM.

703.2.8 LINE SPACING. SPACING BETWEEN THE BASELINES OF SEPARATE LINES OF RAISED CHARACTERS WITHIN A MESSAGE SHALL BE 135 PERCENT MINIMUM AND 170 PERCENT MAXIMUM OF THE RAISED CHARACTER HEIGHT.

703.3 BRAILLE. BRAILLE SHALL BE CONTRACTED (GRADE 2) AND SHALL COMPLY WITH 703.3 AND 703.4.

703.3.1 DIMENSIONS AND CAPITALIZATION. BRAILLE DOTS SHALL HAVE A DOMED OR ROUNDED SHAPE AND SHALL COMPLY WITH TABLE 703.3.1. THE INDICATION OF AN UPPERCASE LETTER OR LETTERS SHALL ONLY BE USED BEFORE THE FIRST WORD OF SENTENCES, PROPER NOUNS AND NAMES, INDIVIDUAL LETTERS OF THE ALPHABET, INITIALS AND ACRONYMS.

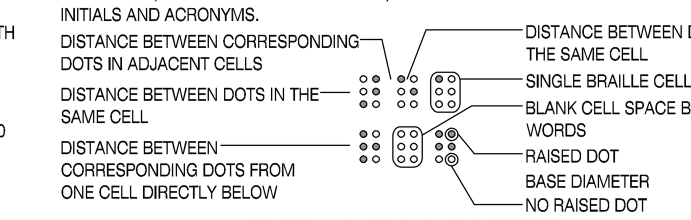

FIGURE 703.3.1 BRAILLE MEASUREMENT

703.3.2 POSITION. BRAILLE SHALL BE POSITIONED BELOW THE CORRESPONDING TEXT. IF TEXT IS MULTI-LINED, BRAILLE SHALL BE PLACED BELOW THE ENTIRE TEXT. BRAILLE SHALL BE SEPARATED 3/8 INCH (9.5 MM) MINIMUM FROM ANY OTHER TACTILE CHARACTERS AND 3/8 INCH (9.5 MM) MINIMUM FROM RAISED BORDERS AND DECORATIVE ELEMENTS.

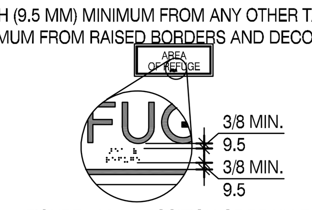

FIGURE 703.3.2 POSITION OF BRAILLE

703.4 INSTALLATION HEIGHT AND LOCATION. SIGNS WITH TACTILE CHARACTERS SHALL COMPLY WITH 703.4.

703.4.1 HEIGHT ABOVE FINISH FLOOR OR GROUND. TACTILE CHARACTERS ON SIGNS SHALL BE LOCATED 48 INCHES (1220 MM) MINIMUM ABOVE THE FINISH FLOOR OR GROUND SURFACE, MEASURED FROM THE BASELINE TO THE LOWEST TACTILE CHARACTER AND 60 INCHES (1525 MM) MAXIMUM ABOVE THE FINISH FLOOR OR GROUND SURFACE, MEASURED FROM THE BASELINE OF THE HIGHEST TACTILE CHARACTER.

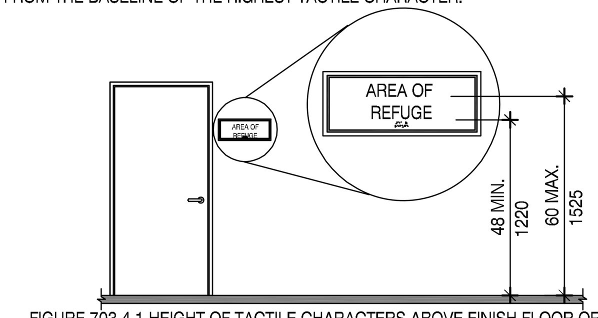

FIGURE 703.4.1 HEIGHT OF TACTILE CHARACTERS ABOVE FINISH FLOOR OR GROUND

703.4.2 LOCATION. WHERE A TACTILE SIGN IS PROVIDED AT A DOOR, THE SIGN SHALL BE LOCATED ALONGSIDE THE DOOR AT THE LATCH SIDE. WHERE A TACTILE SIGN IS PROVIDED AT DOUBLE DOORS WITH ONE ACTIVE LEAF, THE SIGN SHALL BE LOCATED ON THE INACTIVE LEAF. WHERE A TACTILE SIGN IS PROVIDED AT DOUBLE DOORS WITH TWO ACTIVE LEAFS, THE SIGN SHALL BE LOCATED TO THE RIGHT OF THE RIGHT HAND DOOR. WHERE THERE IS NO WALL SPACE AT THE LATCH SIDE OF A SINGLE DOOR OR AT THE RIGHT SIDE OF DOUBLE DOORS, SIGNS SHALL BE LOCATED ON THE NEAREST ADJACENT WALL. SIGNS CONTAINING TACTILE CHARACTERS SHALL BE LOCATED SO THAT A CLEAR FLOOR SPACE OF 18 INCHES (455 MM) MINIMUM BY 18 INCHES (455 MM) MINIMUM, CENTERED ON THE TACTILE CHARACTERS, IS PROVIDED BEYOND THE ARC OF ANY DOOR SWING BETWEEN THE CLOSED POSITION AND 45 DEGREE OPEN POSITION.

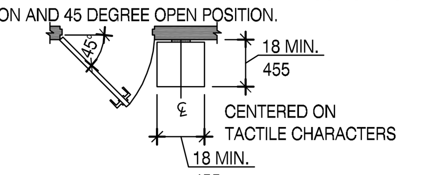

FIGURE 703.4.2 LOCATION OF TACTILE SIGNS AT DOORS

703.5 VISUAL CHARACTERS. VISUAL CHARACTERS SHALL COMPLY WITH 703.5.

703.5.1 FINISH AND CONTRAST. CHARACTERS AND THEIR BACKGROUND SHALL HAVE A NON-GLARE FINISH. CHARACTERS SHALL CONTRAST WITH THEIR BACKGROUND WITH EITHER LIGHT CHARACTERS ON A DARK BACKGROUND OR DARK CHARACTERS ON A LIGHT BACKGROUND.

703.5.2 CASE. CHARACTERS SHALL BE UPPERCASE OR LOWERCASE OR A COMBINATION OF BOTH.

703.5.3 STYLE. CHARACTERS SHALL BE CONVENTIONAL IN FORM. CHARACTERS SHALL NOT BE ITALIC, OBLIQUE, SCRIPT, HIGHLY DECORATIVE, OR OF OTHER UNUSUAL FORMS.

703.5.4 CHARACTER PROPORTIONS. CHARACTERS SHALL BE SELECTED FROM FONTS WHERE THE WIDTH OF THE UPPERCASE LETTER "0" IS 55 PERCENT MINIMUM AND 110 PERCENT MAXIMUM OF THE HEIGHT OF THE UPPERCASE LETTER "I".

703.5.5 CHARACTER HEIGHT. MINIMUM CHARACTER HEIGHT SHALL COMPLY WITH TABLE 703.5.5. VIEWING DISTANCE SHALL BE MEASURED AS THE HORIZONTAL DISTANCE BETWEEN THE CHARACTER AND AN OBSTRUCTION PREVENTING FURTHER APPROACH TOWARDS THE SIGN. CHARACTER HEIGHT SHALL BE BASED ON THE UPPERCASE LETTER "I".

703.5.6 HEIGHT FROM FINISH FLOOR OR GROUND. VISUAL CHARACTERS SHALL BE 40 INCHES (1015 MM) MINIMUM ABOVE THE FINISH FLOOR OR GROUND.

703.5.7 STROKE THICKNESS. STROKE THICKNESS OF THE UPPERCASE LETTER "I" SHALL BE 10 PERCENT MINIMUM AND 30 PERCENT MAXIMUM OF THE HEIGHT OF THE CHARACTER.

703.5.8 CHARACTER SPACING. CHARACTER SPACING SHALL BE MEASURED BETWEEN THE TWO CLOSEST POINTS OF ADJACENT CHARACTERS, EXCLUDING WORD SPACES. SPACING BETWEEN INDIVIDUAL CHARACTERS SHALL BE 10 PERCENT MINIMUM AND 35 PERCENT MAXIMUM OF CHARACTER HEIGHT.

703.5.9 LINE SPACING. SPACING BETWEEN THE BASELINES OF SEPARATE LINES OF CHARACTERS WITHIN A MESSAGE SHALL BE 135 PERCENT MINIMUM AND 170 PERCENT MAXIMUM OF THE CHARACTER HEIGHT.

703.6 PICTOGRAMS. PICTOGRAMS SHALL COMPLY WITH 703.6.

703.6.1 PICTOGRAM FIELD. PICTOGRAMS SHALL HAVE A FIELD HEIGHT OF 6 INCHES (150MM) MINIMUM. CHARACTERS AND BRAILLE SHALL NOT BE LOCATED IN THE PICTOGRAM FIELD.

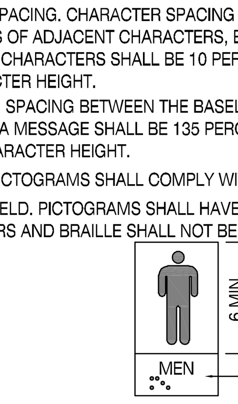

FIGURE 703.6.1 PICTOGRAM FIELD DARK-ON-LIGHT

703.6.2 FINISH AND CONTRAST. PICTOGRAMS AND THEIR FIELD SHALL HAVE A NON-GLARE FINISH. PICTOGRAMS SHALL CONTRAST WITH THEIR FIELD WITH EITHER A LIGHT PICTOGRAM ON A DARK FIELD OR A DARK PICTOGRAM ON A LIGHT FIELD.

703.6.3 TEXT DESCRIPTORS. PICTOGRAMS SHALL HAVE TEXT DESCRIPTORS LOCATED DIRECTLY BELOW THE PICTOGRAM FIELD. TEXT DESCRIPTORS SHALL COMPLY WITH 703.2, 703.3, AND 703.4.

703.7 SYMBOLS OF ACCESSIBILITY. SYMBOLS OF ACCESSIBILITY SHALL COMPLY WITH 703.7.

703.7.1 FINISH AND CONTRAST. SYMBOLS OF ACCESSIBILITY AND THEIR BACKGROUND SHALL HAVE A NON-GLARE FINISH. SYMBOLS OF ACCESSIBILITY SHALL CONTRAST WITH THEIR BACKGROUND WITH EITHER A LIGHT SYMBOL ON A DARK BACKGROUND OR A DARK SYMBOL ON A LIGHT BACKGROUND.

OXFORD ARCHITECTURE

2934 Sidco Drive
Suite 120
Nashville, TN 37204

Architecture
Planning
Interior Architecture

TRACTOR SUPPLY COMPANY

BOUTTE
LOUISIANA

This drawing and the design shown is the property of the architect. The reproduction, copying or use of this drawing without their written consent is prohibited and any infringement will be subject to legal action

Job Number:	2428
Date:	07.23.2024
Revisions:	
Revisions:	
Revisions:	
	ACCESSIBILITY STANDARDS
Sheet Number:	A0.2

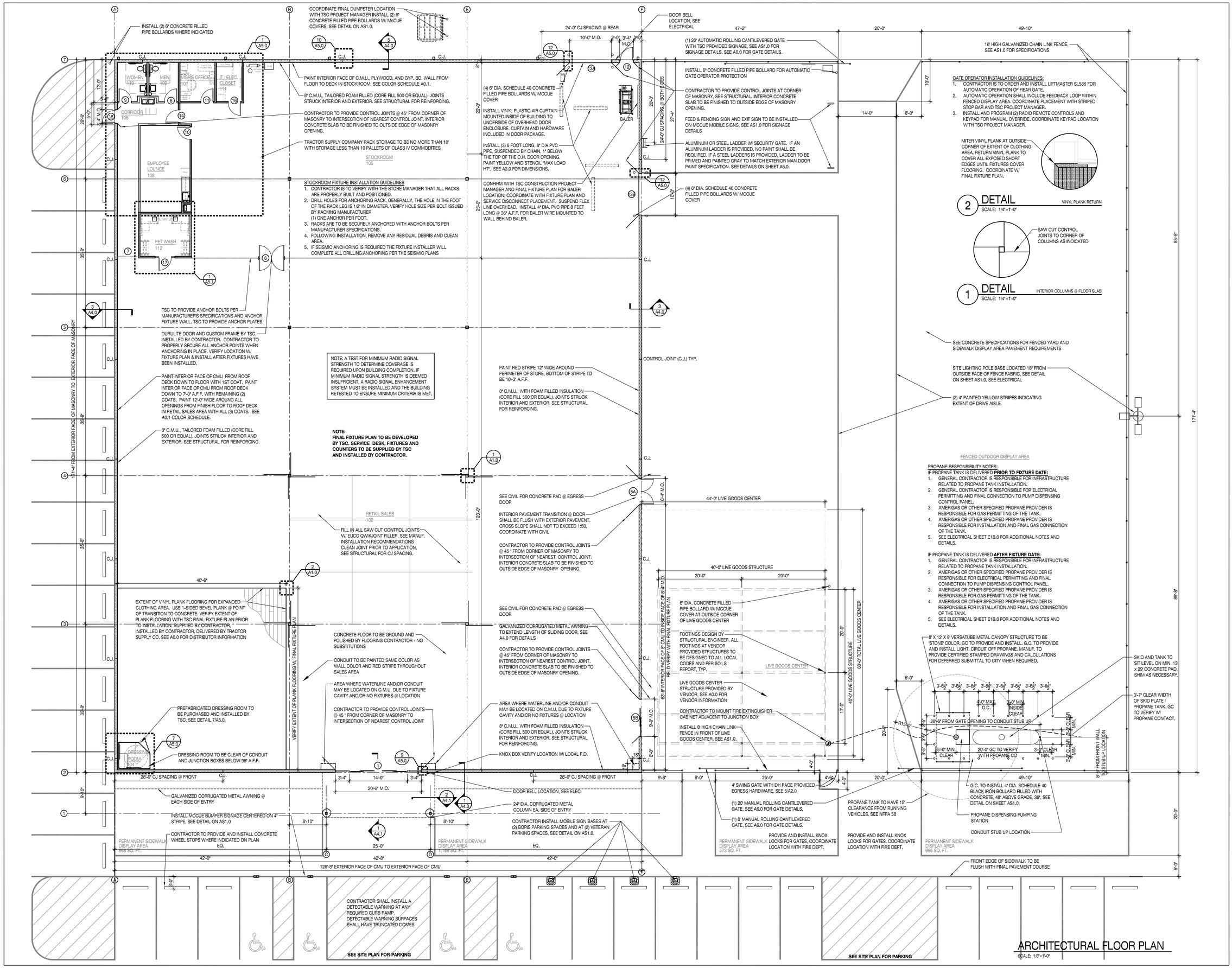

ARCHITECTURAL FLOOR PLAN
SCALE: 1/8"=1'-0"

OXFORD ARCHITECTURE
2934 Sidco Drive
Suite 120
Nashville, TN 37204
Architecture
Planning
Interior Architecture

TRACTOR SUPPLY COMPANY

BOUTTE LOUISIANA

This drawing and the design shown is the property of the architect. The reproduction, copying or use of this drawing without their written consent is prohibited and any infringement will be subject to legal action

Job Number: 2428

Date: 07.23.2024

Revisions:

Revisions:

Revisions:

ARCHITECTURAL FLOOR PLAN

Sheet Number: A1.0

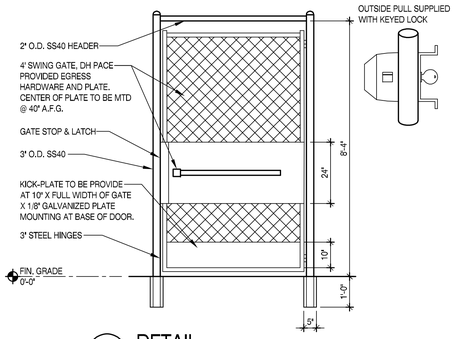

5 DETAIL
SCALE: 1/2"=1'-0"
GATE EGRESS HARDWARE

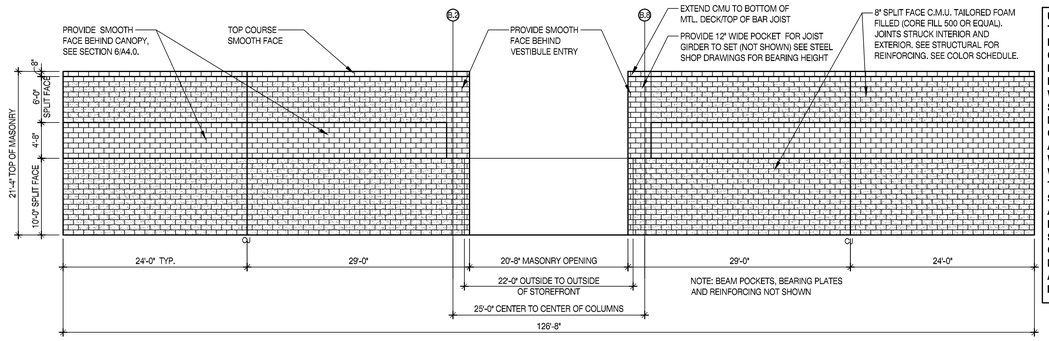

1a ELEVATION
SCALE: 1/8"=1'-0"
FRONT MASONRY

UNLESS PREVIOUSLY DIRECTED BY THE BUILDING OWNER IN WRITING, DURING CONSTRUCTION THE CONTRACTOR SHALL BE RESPONSIBLE FOR COVERING ANY PARTIALLY COMPLETED MASONRY WALL(S) (CMU, BRICK, ETC.) WITH STRONG WEATHER RESISTIVE MATERIAL DURING ALL TIMES WHEN CONSTRUCTION IS NOT IN PROGRESS AND ESPECIALLY AT THE END OF EACH WORK DAY TO PREVENT WATER/MOISTURE FROM ENTERING THE MASONRY WALL(S). THE COVER SHALL BE DRAPED OVER THE WALL AND EXTEND A MINIMUM OF (2) TWO FEET DOWN FROM BOTH SIDES AND SECURELY HELD IN PLACE. CONTINUE THIS PROCESS UNTIL MASONRY WALL IS WEATHER-TIGHT AND/OR THE ROOFING MEMBRANE IS INSTALLED AND SECURED.

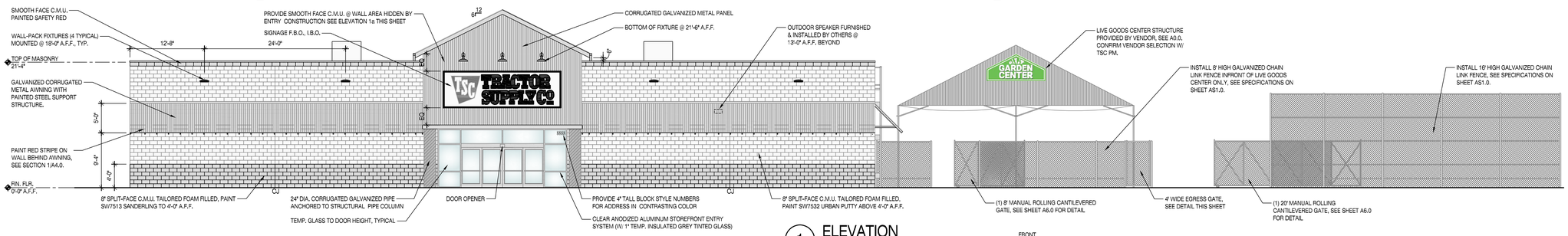

1 ELEVATION
SCALE: 1/8"=1'-0"
FRONT

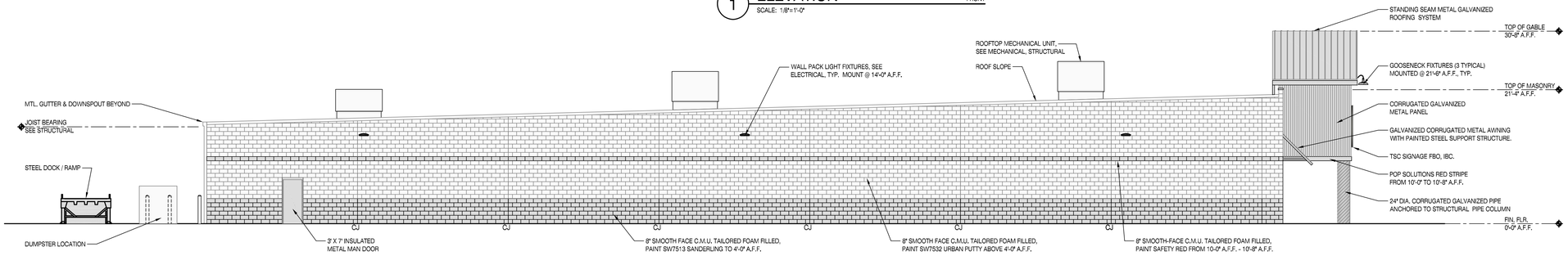

2 ELEVATION
SCALE: 1/8"=1'-0"
LEFT SIDE

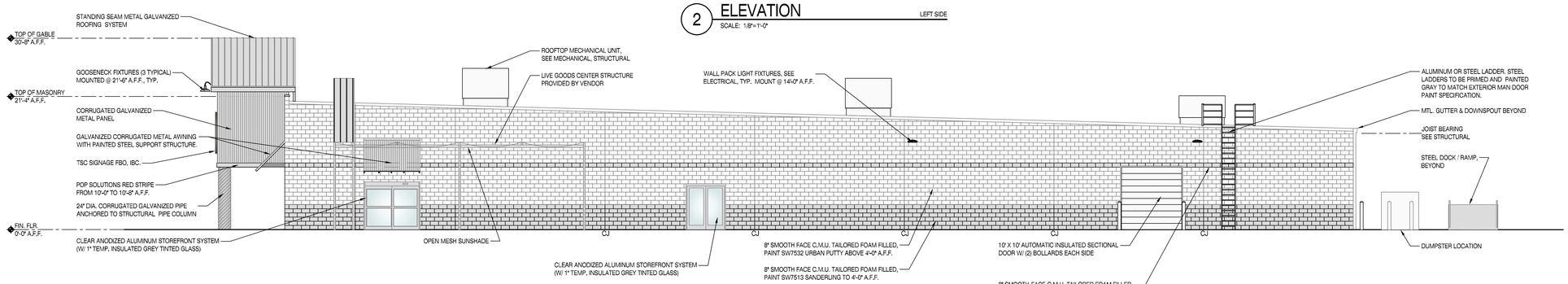

GENERAL CONTRACTOR, OR, THE OWNERS TESTING COMPANY SHALL PROVIDE MOISTURE TESTING OF ALL CMU AND CONCRETE EXTERIOR WALLS PER ASTM D4263 PRIOR TO APPLICATION OF PAINT. TSC PROJECT MANAGER MUST APPROVE IF THE MOISTURE CONTENT IS ABOVE 15%.

3 ELEVATION
SCALE: 1/8"=1'-0"
RIGHT SIDE

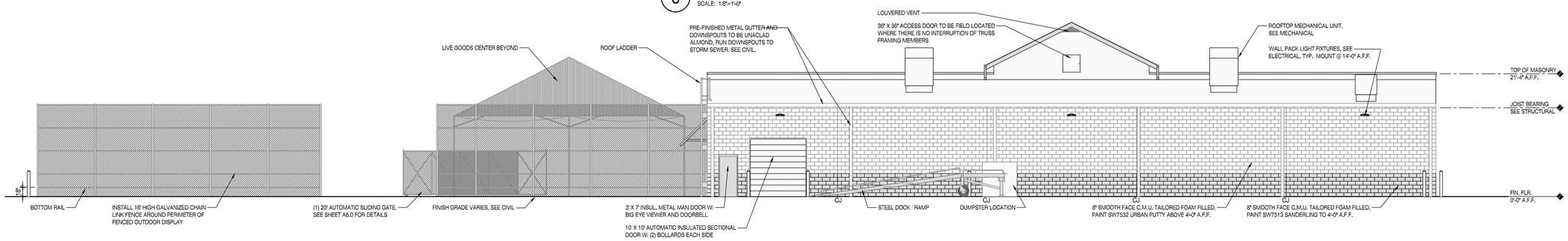

4 ELEVATION
SCALE: 1/8"=1'-0"
REAR

OXFORD ARCHITECTURE
2934 Sidco Drive
Suite 120
Nashville, TN 37204
Architecture
Planning
Interior Architecture

TRACTOR SUPPLY COMPANY

BOUTTE LOUISIANA

This drawing and the design shown is the property of the architect. The reproduction, copying or use of this drawing without their written consent is prohibited and any infringement will be subject to legal action

Job Number: 2428

Date: 07.23.2024

Revisions:

Revisions:

Revisions:

ARCHITECTURAL ELEVATIONS

Sheet Number: A2.0

OXFORD
ARCHITECTURE

2934 Sidco Drive
Suite 120
Nashville, TN 37204

Architecture
Planning
Interior Architecture

TRACTOR SUPPLY COMPANY

BOUTTE LOUISIANA

GENERAL CONTRACTOR, OR, THE OWNERS TESTING COMPANY SHALL PROVIDE MOISTURE TESTING OF ALL CMU AND CONCRETE EXTERIOR WALLS PER ASTM D4263 PRIOR TO APPLICATION OF PAINT. TSC PROJECT MANAGER MUST APPROVE IF THE MOISTURE CONTENT IS ABOVE 15%.

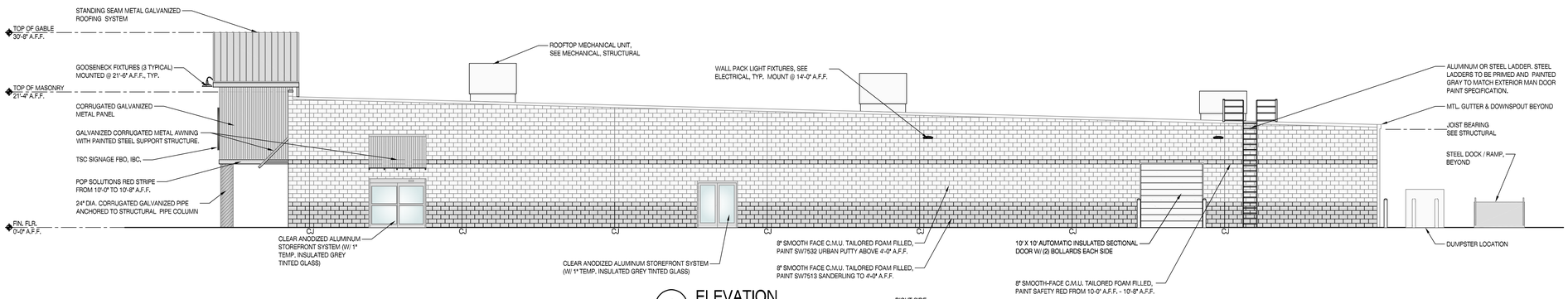

1 ELEVATION RIGHT SIDE
SCALE: 1/8"=1'-0"

This drawing and the design shown is the property of the architect. The reproduction, copying or use of this drawing without their written consent is prohibited and any infringement will be subject to legal action

Job Number: 2428

Date: 07.23.2024

Revisions:

Revisions:

Revisions:

ARCHITECTURAL ELEVATIONS

Sheet Number: A2.1

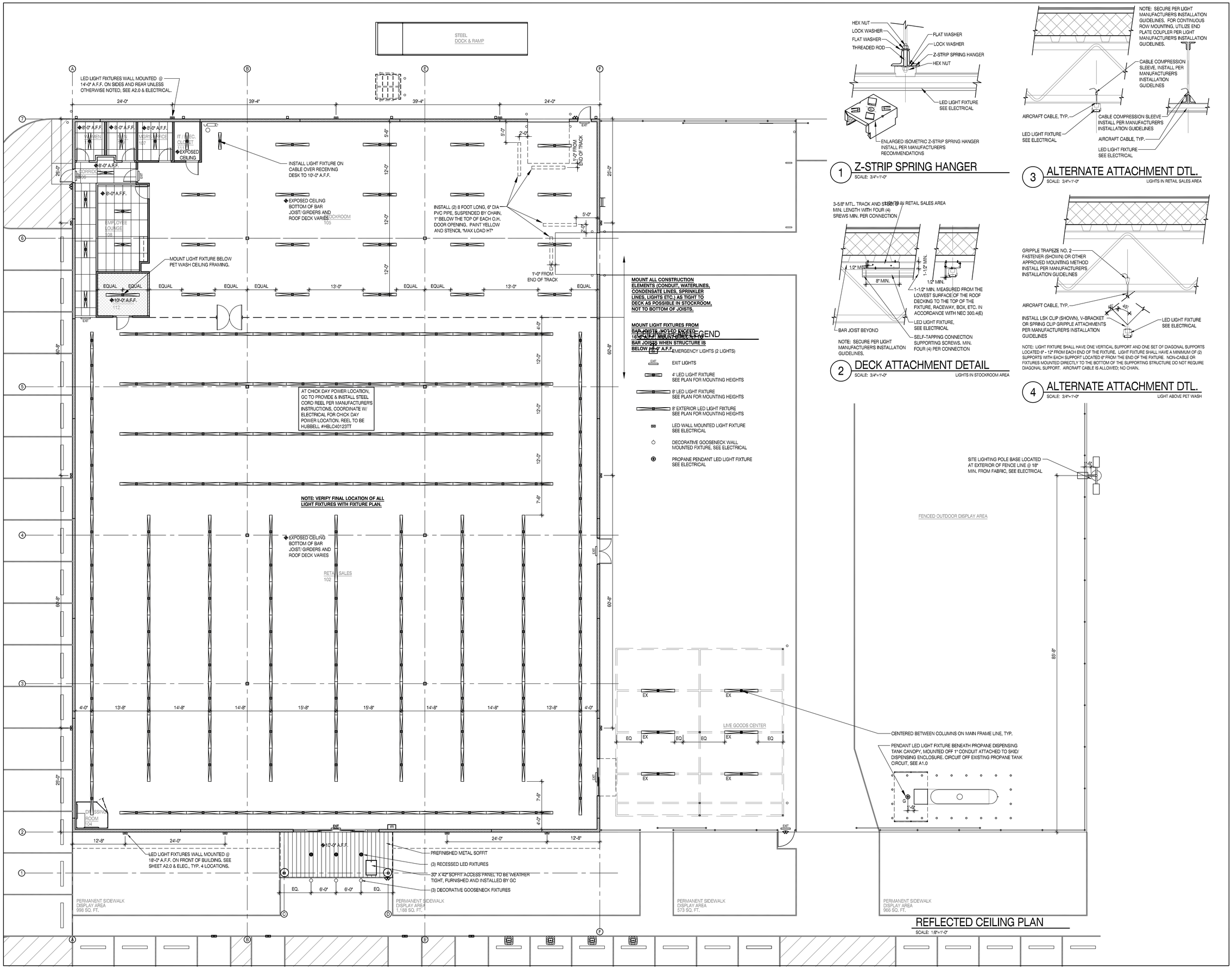

LEGEND

- EMERGENCY LIGHTS (2 LIGHTS)
- EXIT LIGHTS
- 4' LED LIGHT FIXTURE SEE PLAN FOR MOUNTING HEIGHTS
- 8' LED LIGHT FIXTURE SEE PLAN FOR MOUNTING HEIGHTS
- 8' EXTERIOR LED LIGHT FIXTURE SEE PLAN FOR MOUNTING HEIGHTS
- LED WALL MOUNTED LIGHT FIXTURE SEE ELECTRICAL
- DECORATIVE GOOSENECK WALL MOUNTED FIXTURE, SEE ELECTRICAL
- PROPANE PENDANT LED LIGHT FIXTURE SEE ELECTRICAL

1 Z-STRIP SPRING HANGER
SCALE: 3/4"=1'-0"

2 DECK ATTACHMENT DETAIL
SCALE: 3/4"=1'-0" LIGHTS IN STOCKROOM AREA

3 ALTERNATE ATTACHMENT DTL.
SCALE: 3/4"=1'-0" LIGHTS IN RETAIL SALES AREA

NOTE: LIGHT FIXTURE SHALL HAVE ONE VERTICAL SUPPORT AND ONE SET OF DIAGONAL SUPPORTS LOCATED 6" - 12" FROM EACH END OF THE FIXTURE. LIGHT FIXTURE SHALL HAVE A MINIMUM OF (2) SUPPORTS WITH EACH SUPPORT LOCATED 6" FROM THE END OF THE FIXTURE. NON-CABLE OR FIXTURES MOUNTED DIRECTLY TO THE BOTTOM OF THE SUPPORTING STRUCTURE DO NOT REQUIRE DIAGONAL SUPPORT. AIRCRAFT CABLE IS ALLOWED; NO CHAIN.

4 ALTERNATE ATTACHMENT DTL.
SCALE: 3/4"=1'-0" LIGHT ABOVE PET WASH

REFLECTED CEILING PLAN
SCALE: 1/8"=1'-0"

OXFORD ARCHITECTURE
2934 Sidco Drive
Suite 120
Nashville, TN 37204
Architecture
Planning
Interior Architecture

TSC

TRACTOR SUPPLY COMPANY

BOUTTE LOUISIANA

This drawing and the design shown is the property of the architect. The reproduction, copying or use of this drawing without their written consent is prohibited and any infringement will be subject to legal action

Job Number: 2428

Date: 07.23.2024

Revisions:

Revisions:

Revisions:

REFLECTED CEILING PLAN

Sheet Number: A3.0

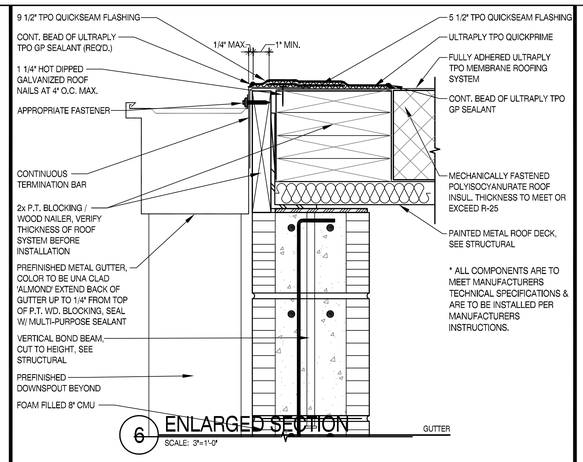

6 ENLARGED SECTION
SCALE: 3"=1'-0"

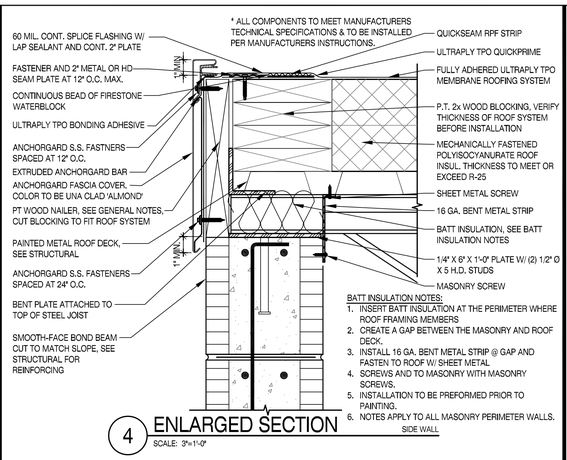

4 ENLARGED SECTION
SCALE: 3"=1'-0"

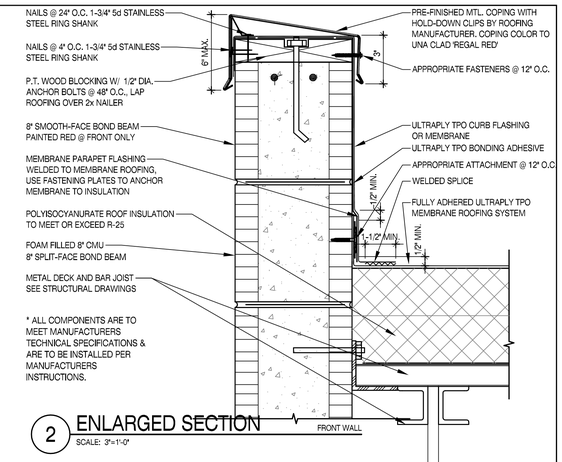

2 ENLARGED SECTION
SCALE: 3"=1'-0"

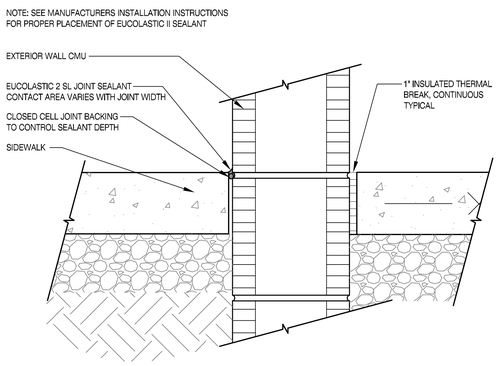

9 ENLARGED SECTION
SCALE: 3"=1'-0"
JOINT @ SLAB

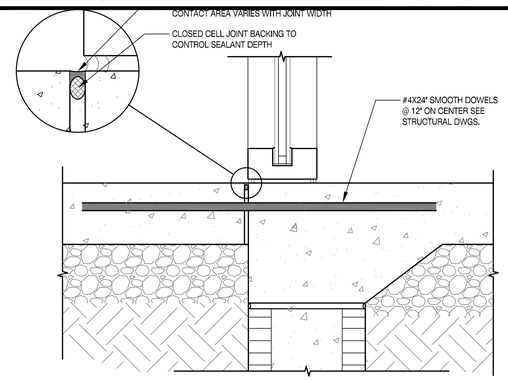

8 ENLARGED SECTION
SCALE: 3"=1'-0"
JOINT @ EXTERIOR ENTRY

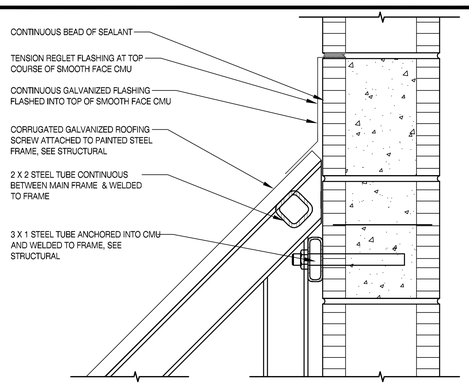

7 ENLARGED SECTION
SCALE: 3"=1'-0"
TOP CANOPY CONNECTION

GENERAL NOTES:
1. ROUND ALL METAL CORNERS & PLACE BACK OF GUTTER STRAP 1/4" BELOW TOP OF WOOD NAILER.
2. DO NOT PRE-NAIL MEMBRANE TO THE FACE OF THE WD. NAILER.
3. ANCHOR GUTTER IN ACCORDANCE WITH SMACNA RECOMMENDATIONS.
4. WOOD NAILERS MUST BE INSTALLED TO MEET APPLICABLE BUILDING CODES OR 200 LBS PER LINEAR FOOT MIN. IN ANY GIVEN DIRECTION.
5. FLANGE OF METAL GUTTER MUST BE FULLY SUPPORTED BY WOOD & TERMINATE AT LEAST 1/2" FROM EDGE OF WOOD.
6. IF THE FLANGE OF THE METAL GUTTER IS NOT COMPLETELY COVERED WITH QUICKSEAM FLASHING, THEN AN ADDITIONAL PEACE OF QUICKSEAM FLASHING SHALL BE INSTALLED AT ALL METAL SPLICES.

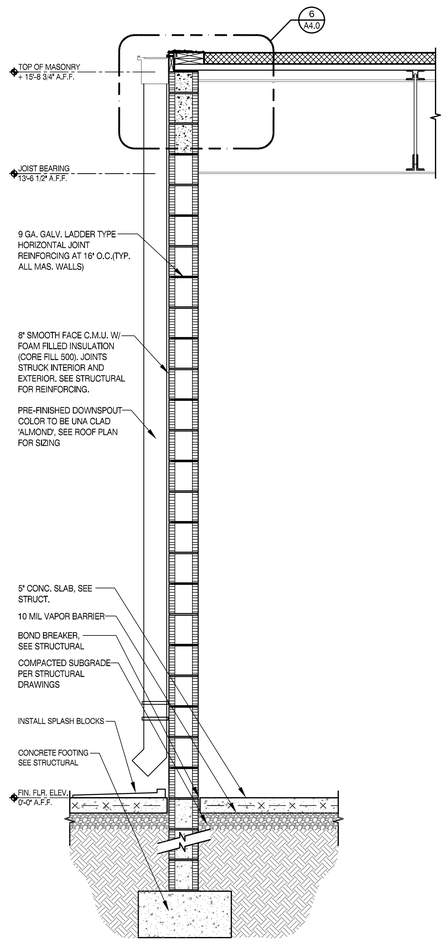

5 SECTION
SCALE: 3/4"=1'-0"
REAR WALL

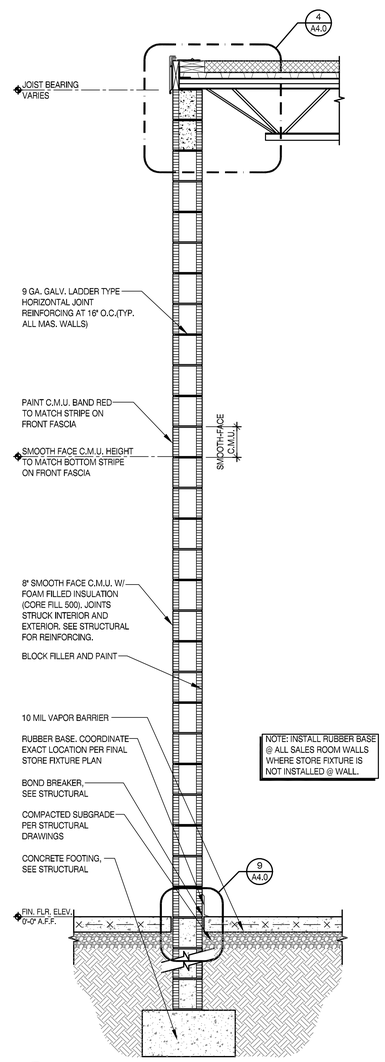

3 SECTION
SCALE: 3/4"=1'-0"
SIDE WALL

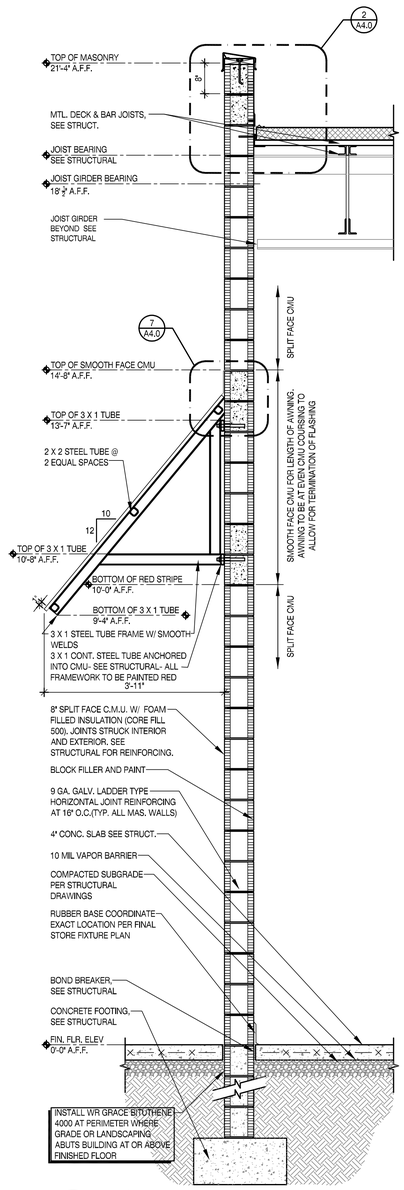

1 SECTION
SCALE: 3/4"=1'-0"
FRONT WALL

OXFORD ARCHITECTURE
2934 Sidco Drive
Suite 120
Nashville, TN 37204
Architecture
Planning
Interior Architecture

TSC
TRACTOR SUPPLY COMPANY
BOUTTE LOUISIANA

This drawing and the design shown is the property of the architect. The reproduction, copying or use of this drawing without their written consent is prohibited and any infringement will be subject to legal action

Job Number: 2428
Date: 07.23.2024
Revisions:
Revisions:
Revisions:
SECTIONS & DETAILS
Sheet Number: A4.0

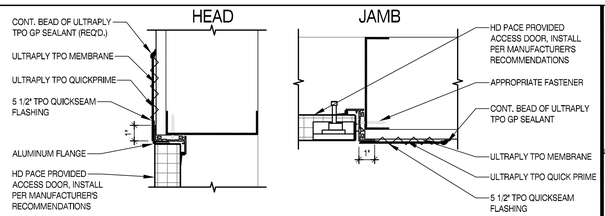

NOTE: USE 'LAP SPLICE USING TPO HEAD SEAM' DETAIL (SEE MANUFACTURER) AT ALL FOUR CORNERS OF THE ACCESS DOOR.

* ALL COMPONENTS ARE TO MEET MANUFACTURERS TECHNICAL SPECIFICATIONS & ARE TO BE INSTALLED PER MANUFACTURERS INSTRUCTIONS.

7 ENLARGED DETAIL @ ACCESS DOOR

SCALE: 3" = 1'-0"

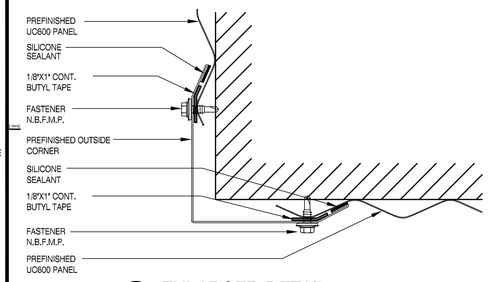

8 ENLARGED DETAIL @ OUTSIDE CORNER

SCALE: NONE

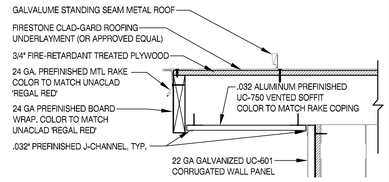

9 ENLARGED DETAIL @ RAKE

SCALE: NONE

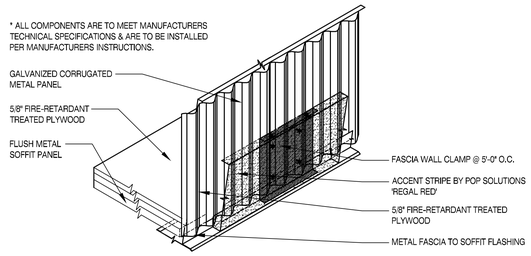

6 ISOMETRIC DETAIL POP SOLUTIONS STRIPE

SCALE: NO SCALE

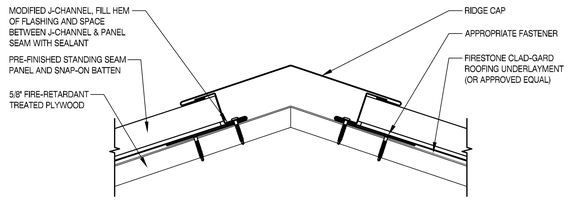

5 ENLARGED DETAIL ROOF CAP

SCALE: 6"=1'-0"

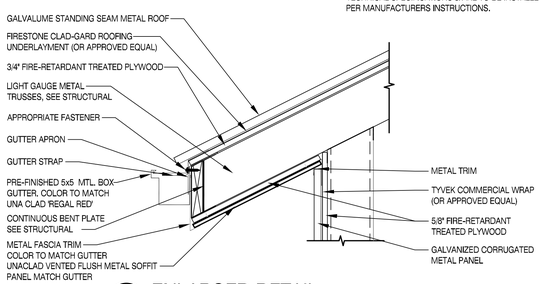

4 ENLARGED DETAIL GUTTER

SCALE: 1-1/2"=1'-0"

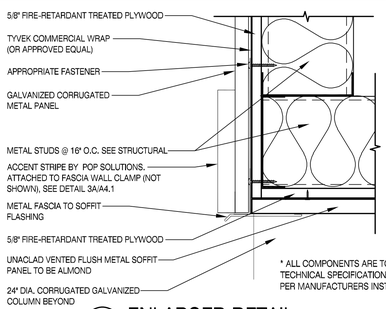

* ALL COMPONENTS ARE TO MEET MANUFACTURERS TECHNICAL SPECIFICATIONS & ARE TO BE INSTALLED PER MANUFACTURERS INSTRUCTIONS.

3 ENLARGED DETAIL POP SOLUTIONS STRIPE

SCALE: 3"=1'-0"

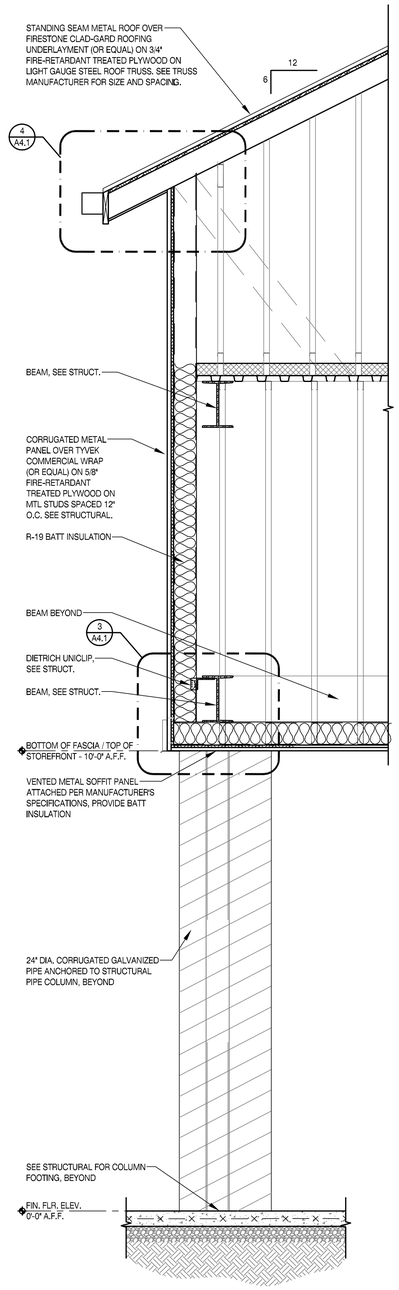

2 SECTION @ ENTRY CANOPY

SCALE: 3/4"=1'-0"

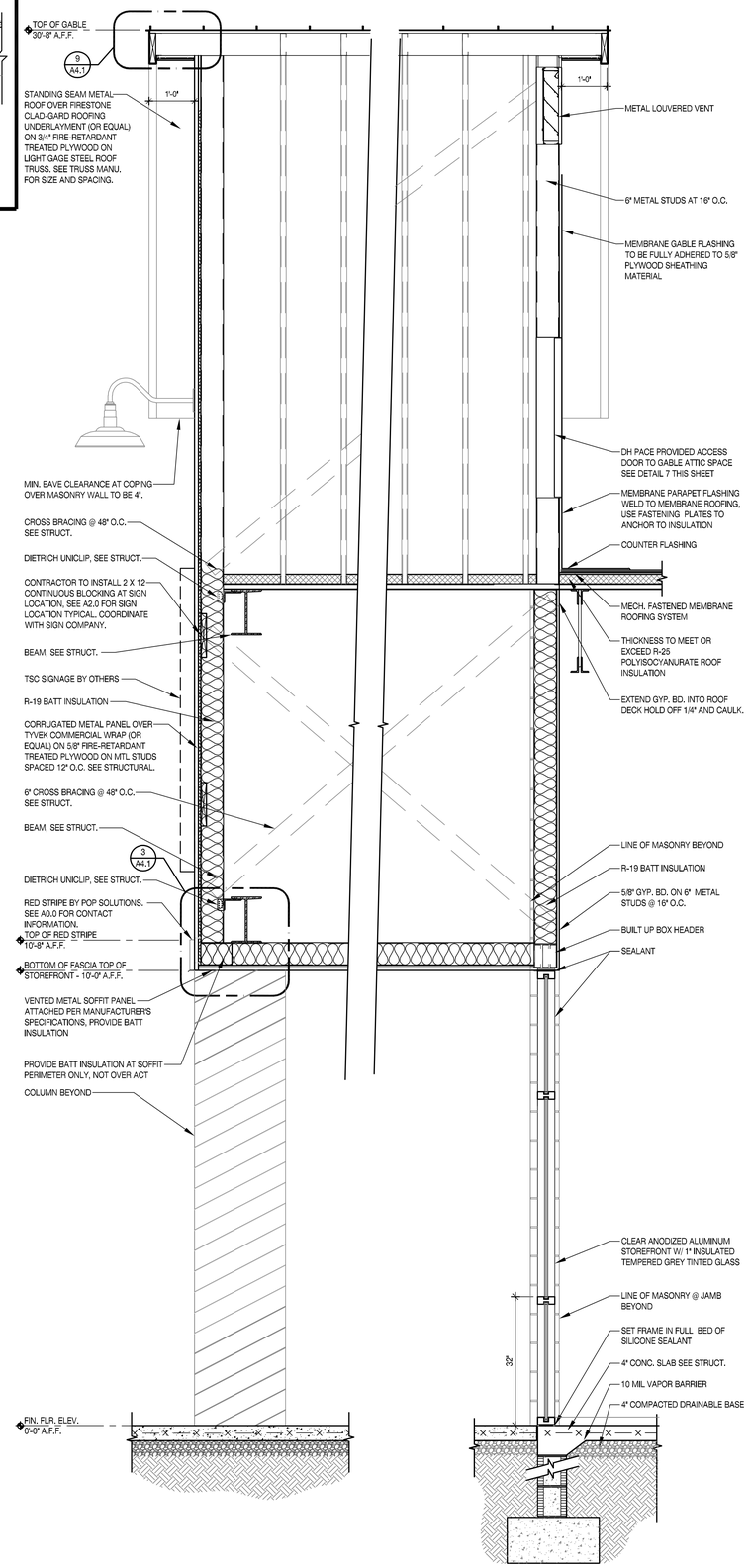

1 WALL SECTION AT SIGN

SCALE: 3/4"=1'-0"

OXFORD ARCHITECTURE

2934 Sidco Drive
Suite 120
Nashville, TN 37204

Architecture
Planning
Interior Architecture

TRACTOR SUPPLY COMPANY

BOUTTE LOUISIANA

This drawing and the design shown is the property of the architect. The reproduction, copying or use of this drawing without their written consent is prohibited and any infringement will be subject to legal action

Job Number: 2428

Date: 07.23.2024

Revisions:

Revisions:

Revisions:

SECTIONS & DETAILS

Sheet Number: A4.1

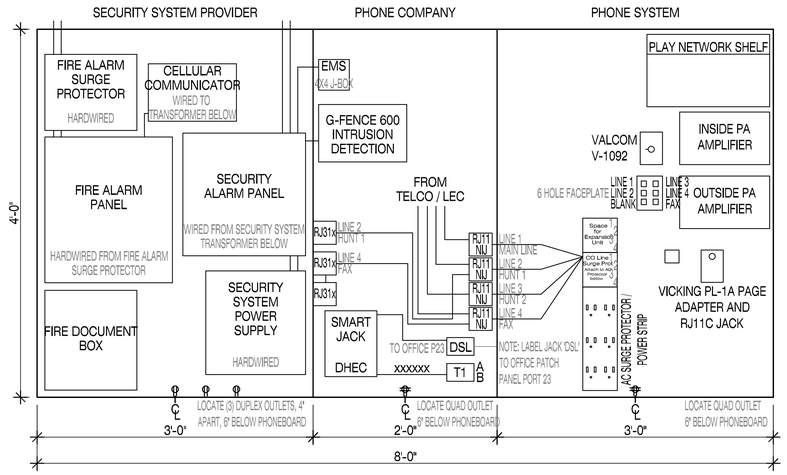

TELEPHONE BOARD
4' X 8' X 5/8" FIRE RETARDANT PLYWOOD PAINTED WHITE (ALWAYS HORIZONTAL)
BOTTOM OF PHONEBOARD TO BE MOUNTED @ 2'-6" A.F.F.

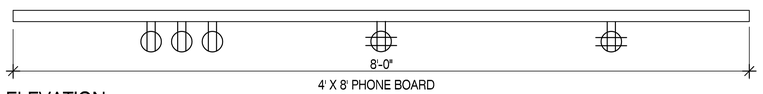

13 ELEVATION
SCALE: 1 1/2" = 1'-0"
@ PHONE BOARD

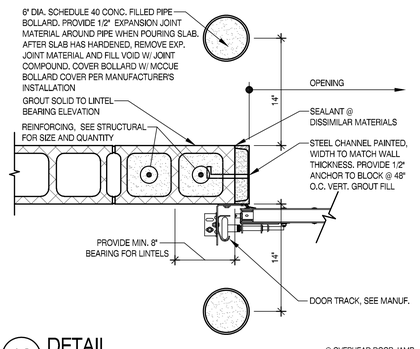

12 DETAIL
SCALE: 1 1/2" = 1'-0"
@ OVERHEAD DOOR JAMB

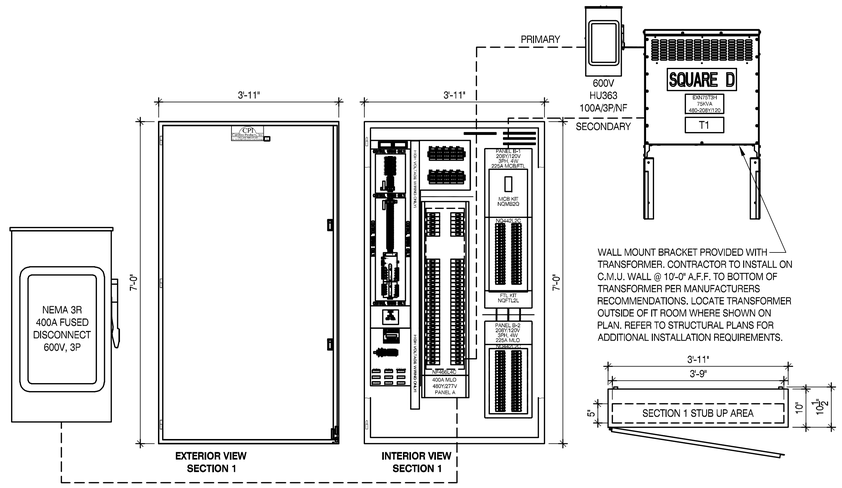

11 PLAN & ELEVATION
SCALE: 3/4" = 1'-0"
@ ELECTRICAL PANELS

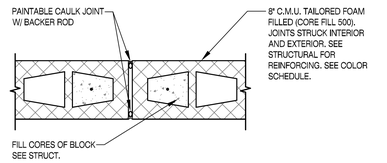

10 DETAIL
SCALE: 1 1/2" = 1'-0"
@ EXPANSION JOINT

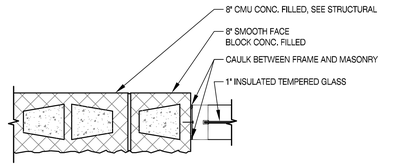

9 DETAIL
SCALE: 1 1/2" = 1'-0"
@ STOREFRONT

8 NOT USED

NOTE: THIS LAYOUT IS FOR CALIFORNIA STORES ONLY. PRE-FABRICATED DRESSING ROOM AND BENCH TO BE INSTALLED @ FRONT OF BUILDING ON SIDE OPPOSITE OF FOD.

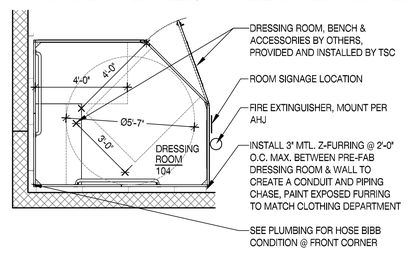

7 ENLARGED DRESSING ROOM PLAN
SCALE: 3/8" = 1'-0"

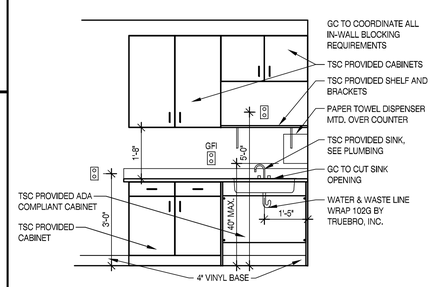

6 ELEVATION
SCALE: 1/2" = 1'-0"
@ BREAK ROOM COUNTER

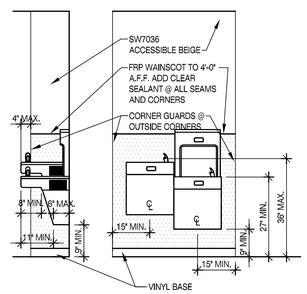

5 ELEVATION
SCALE: 1/2" = 1'-0"
@ DRINKING FOUNTAIN

TOILET ACCESSORIES SCHEDULE

	TYPE	MANUF.	MODEL #	MOUNTING HT.
A	TOILET PAPER DISPENSER	F.B.O., I.B.C.		
B	GRAB BAR	BRADLEY	8320-001-18 8320-001-36 8320-001-42	39" - 41" TO BOTTOM 33" - 36" TO TOP, MAX. 33" - 36" TO TOP, MAX.
C	SOAP DISPENSER	F.B.O., I.B.C.		40" MAX. TO CONTROL
D	STAINLESS STEEL WALL PANEL, 16" WIDE X 36" DEEP			40" MAX. TO TOP
E	MIRROR (1/4" POLISHED PLATE GLASS) 1 PIECE, 18 x 36			40" TO BOTTOM OF REFLECTIVE SURFACE
F	PAPER TOWEL DISPENSER	F.B.O., I.B.C.		40" MAX. TO CONTROL
G	VERDEDRI	WORLD DRYER	Q-974A	40" TO BOTTOM OF UNIT

NOTE:
1. ALL HAND DRYERS, MIRRORS, STAINLESS STEEL WALL PANEL, AND GRAB BARS TO BE PROVIDED AND INSTALLED BY GC. TSC IS NOT RESPONSIBLE.
2. F.B.O., I.B.C. (FURNISHED BY OWNER; INSTALLED BY CONTRACTOR)
3. FLUSH CONTROL SHALL BE LOCATED ON THE OPEN SIDE OF THE WATER CLOSET PER ICC/ANSI 117.1 SECTION 604.6.
4. FRP TO 4'-0" A.F.F. ON ALL WALLS EXCEPT CMU UNLESS NOTED OTHERWISE.
5. ALL PLUMBING FIXTURES TO BE ANCHORED PER ALL ANCHOR POINTS.
6. PROVIDE CEILING BATT INSULATION FOR RESTROOMS.
7. NO ITEMS SHALL BE LOCATED FROM FLOOR TO CEILING WITHIN 18" OF THE EDGE OF THE PULL-SIDE OF THE BATHROOM DOORS.

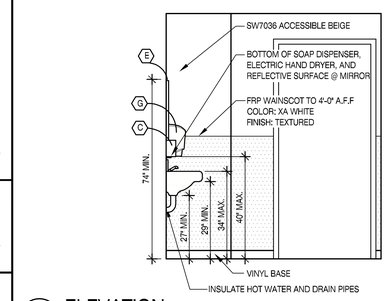

4 ELEVATION
SCALE: 1/2" = 1'-0"
@ RESTROOM

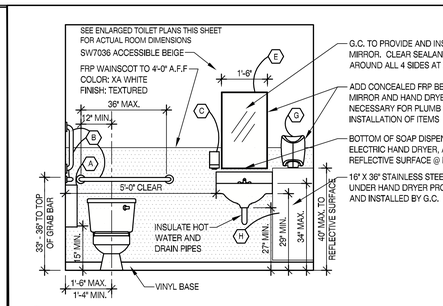

3 ELEVATION
SCALE: 1/2" = 1'-0"
@ RESTROOM

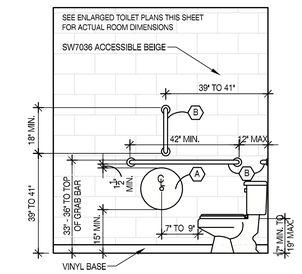

2 ELEVATION
SCALE: 1/2" = 1'-0"
@ RESTROOM

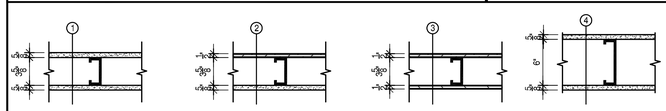

DH PACE WALL THICKNESSES
1. 5/8" TYPE "X" GYP. BD. BOTH SIDES OF 3 5/8" METAL STUDS
2. 5/8" TYPE "X" GYP. BD. ON CORRIDOR SIDE AND 1/2" F.R. PLYWOOD IN STOCKROOM ON 3 5/8" METAL STUDS
3. 1/2" F.R. PLYWOOD BOTH SIDES OF 3 5/8" METAL STUDS
4. 5/8" TYPE "X" GYP. BD. BOTH SIDES OF 6" METAL STUDS

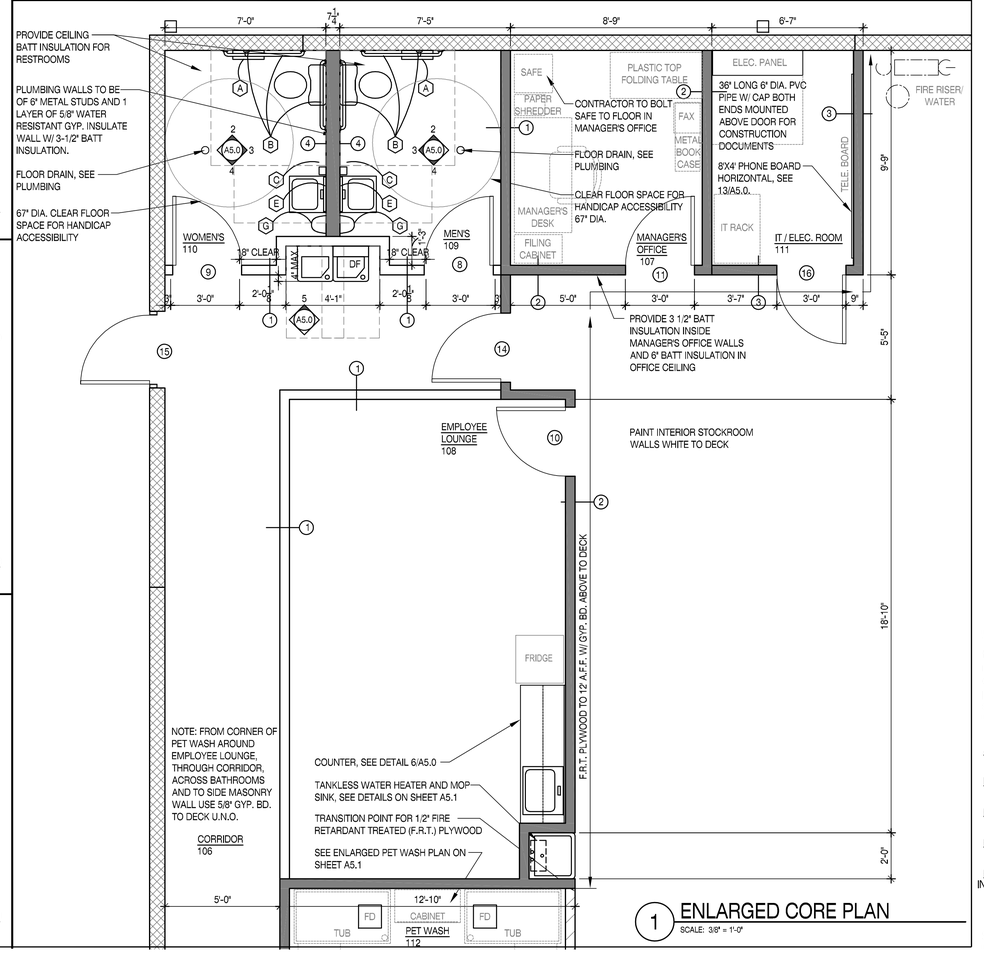

1 ENLARGED CORE PLAN
SCALE: 3/8" = 1'-0"

OXFORD ARCHITECTURE
2934 Sidco Drive
Suite 120
Nashville, TN 37204
Architecture
Planning
Interior Architecture

TSC
TRACTOR SUPPLY COMPANY
BOUTTE LOUISIANA

This drawing and the design shown is the property of the architect. The reproduction, copying or use of this drawing without their written consent is prohibited and any infringement will be subject to legal action

Job Number: 2428
Date: 07.23.2024
Revisions:
Revisions:
Revisions:
INTERIOR PLANS, ELEVATIONS, & DETAILS
Sheet Number: A5.0

16 PERSPECTIVE — PROTOTYPICAL PET WASH
SCALE: NO SCALE

15 NOT USED

14 NOT USED

13 NOT USED

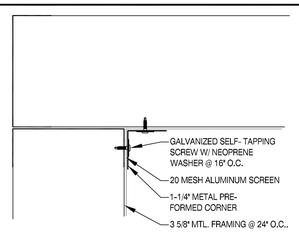

12 DETAIL — @ SCREEN WALL/CEILING CONNECTION
SCALE: 6" = 1'-0"

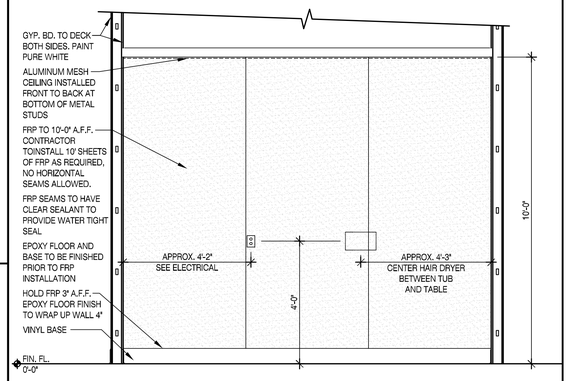

11 ELEVATION — @ INTERIOR PET WASH LEFT SIDE
SCALE: 1/4" = 1'-0"

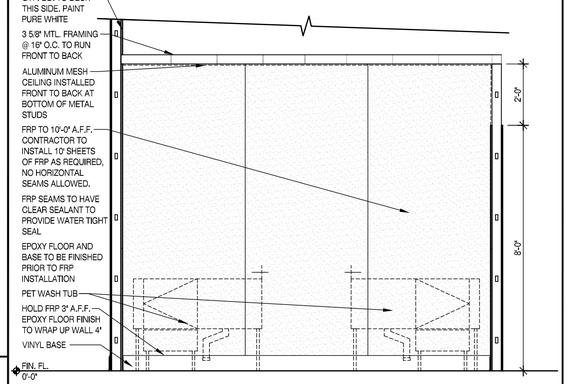

10 ELEVATION — @ INTERIOR PET WASH REAR WALL
SCALE: 1/4" = 1'-0"

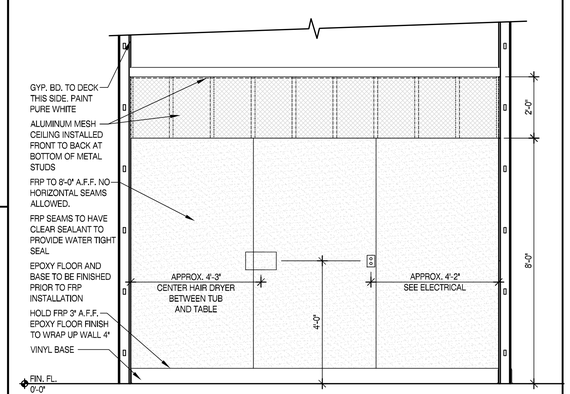

9 ELEVATION — @ INTERIOR PET WASH RIGHT SIDE
SCALE: 1/4" = 1'-0"

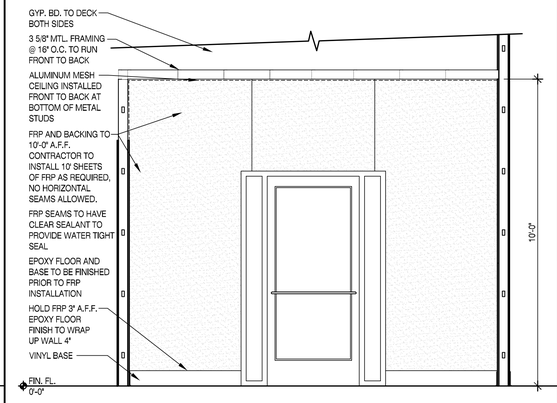

8 ELEVATION — @ INTERIOR PET WASH FRONT WALL
SCALE: 1/4" = 1'-0"

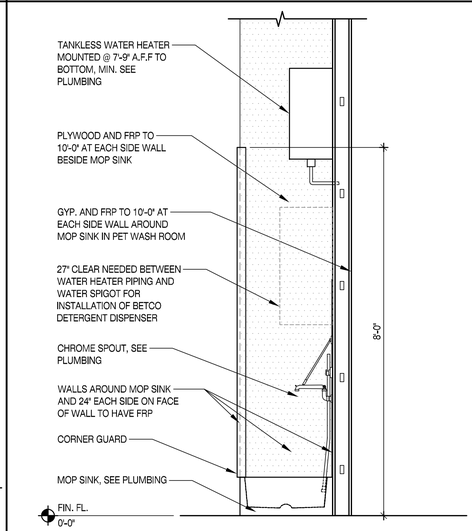

7 SECTION — @ MOP SINK
SCALE: 3/4" = 1'-0"

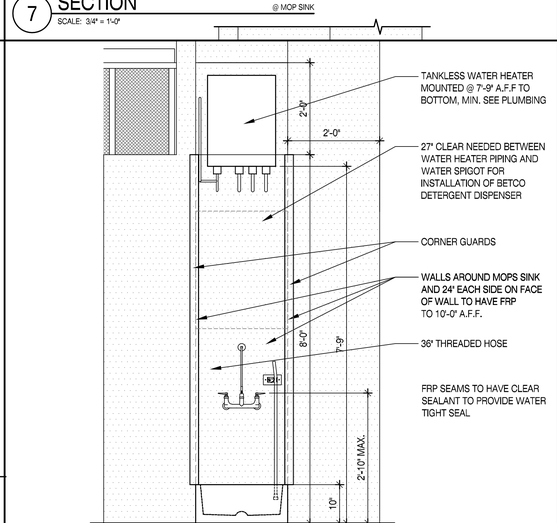

6 ELEVATION — @ MOP SINK
SCALE: 3/4" = 1'-0"

SEE SHEET A1.0 FOR PROPER LOCATION. SEE PLUMBING FOR FIXTURE REQUIREMENTS.

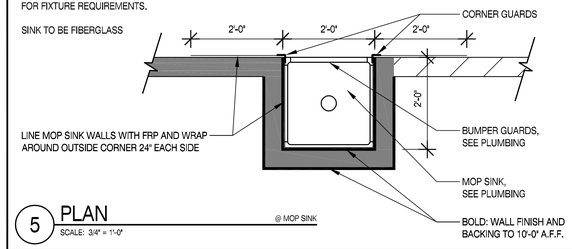

5 PLAN — @ MOP SINK
SCALE: 3/4" = 1'-0"

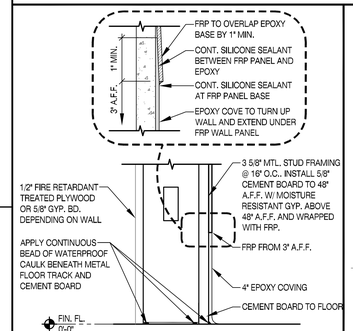

3 DETAIL — @ WALL BASE
SCALE: 3" = 1'-0"

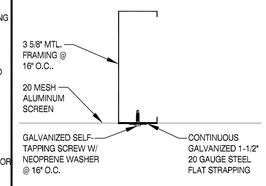

4 DETAIL — @ SCREEN ATTACHMENT
SCALE: 6" = 1'-0"

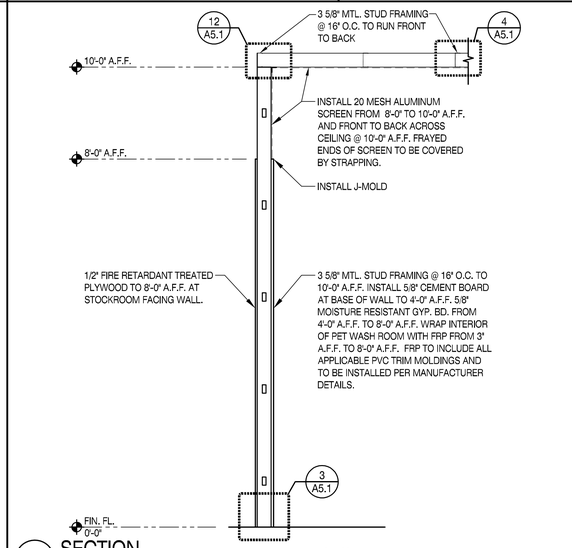

2 SECTION — @ PET WASH ROOM WALL
SCALE: 3/4" = 1'-0"

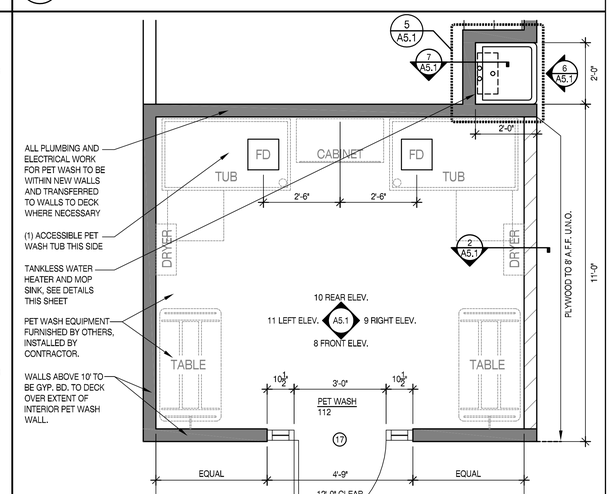

1 PLAN — @ PET WASH ROOM
SCALE: 1/2" = 1'-0"

OXFORD ARCHITECTURE
2934 Sidco Drive
Suite 120
Nashville, TN 37204
Architecture
Planning
Interior Architecture

TSC

TRACTOR SUPPLY COMPANY

BOUTTE LOUISIANA

This drawing and the design shown is the property of the architect. The reproduction, copying or use of this drawing without their written consent is prohibited and any infringement will be subject to legal action

Job Number: 2428

Date: 07.23.2024

Revisions:

Revisions:

Revisions:

PET WASH PLAN, ELEVATIONS, & DETAILS

Sheet Number: A5.1

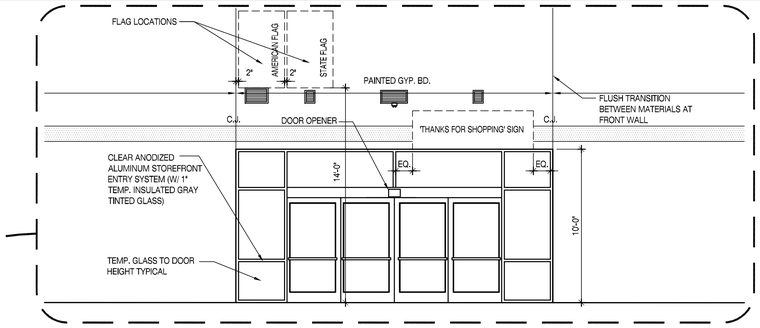

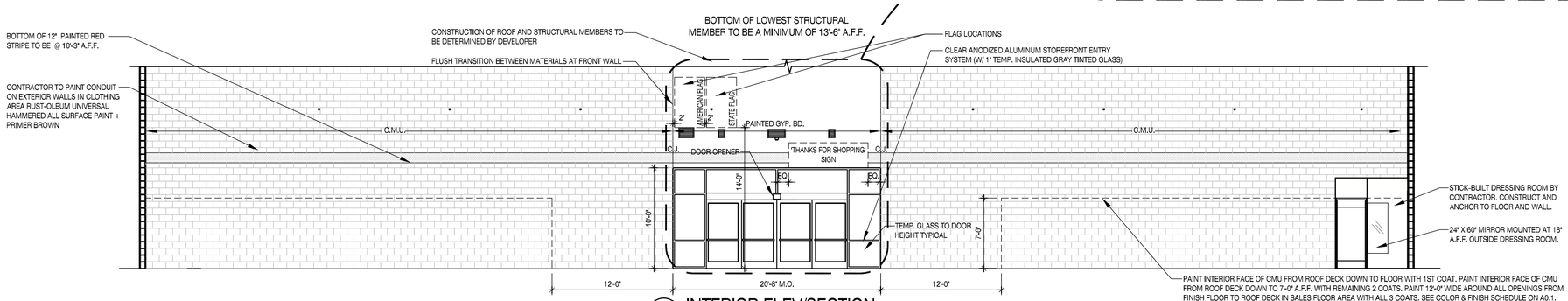

1 INTERIOR ELEV/SECTION FRONT WALL
SCALE: 3/16"=1'-0"

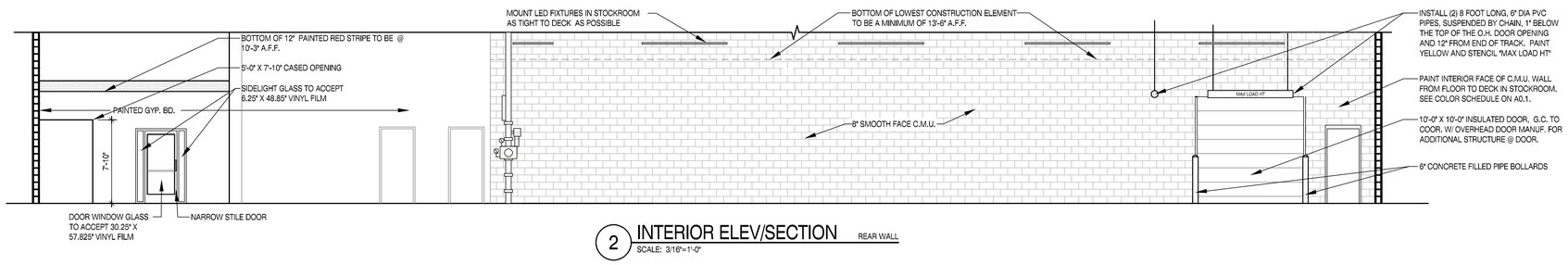

2 INTERIOR ELEV/SECTION REAR WALL
SCALE: 3/16"=1'-0"

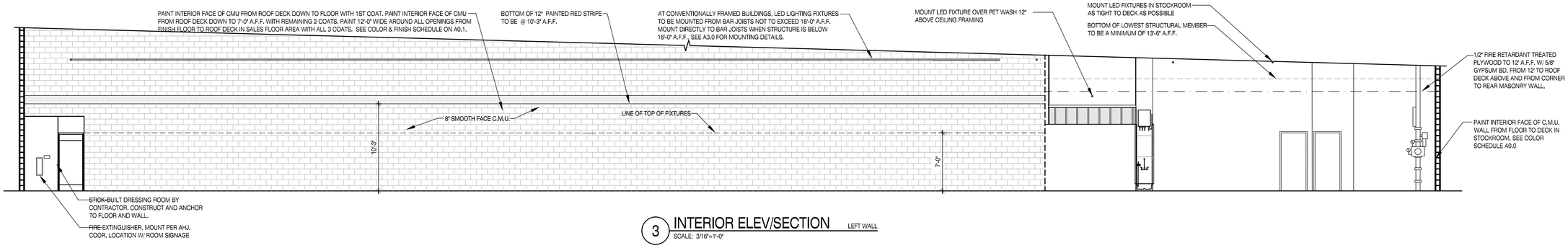

3 INTERIOR ELEV/SECTION LEFT WALL
SCALE: 3/16"=1'-0"

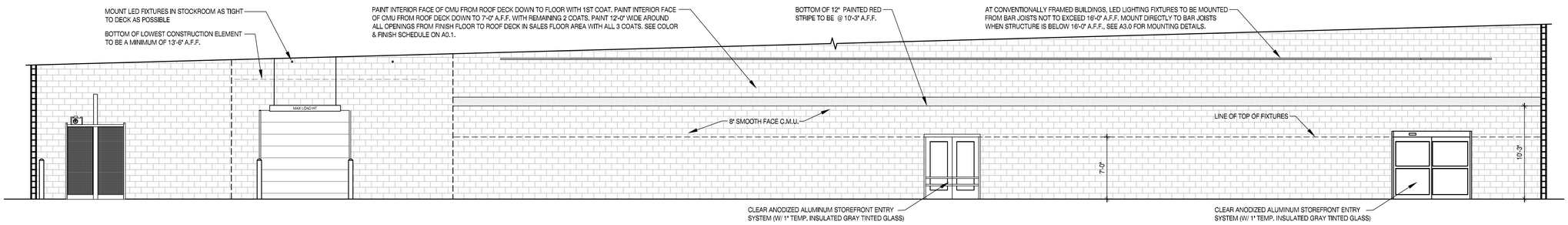

4 INTERIOR ELEV/SECTION RIGHT WALL
SCALE: 3/16"=1'-0"

OXFORD ARCHITECTURE
2934 Sidco Drive
Suite 120
Nashville, TN 37204
Architecture
Planning
Interior Architecture

TSC

TRACTOR SUPPLY COMPANY

BOUTTE LOUISIANA

This drawing and the design shown is the property of the architect. The reproduction, copying or use of this drawing without their written consent is prohibited and any infringement will be subject to legal action

Job Number: 2428

Date: 07.23.2024

Revisions:

Revisions:

Revisions:

INTERIOR ELEVATIONS

Sheet Number: A5.2

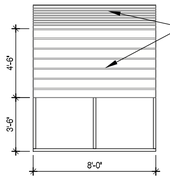

VERSATUBE METAL 12" 'R' PANEL ROOF W/ 'STONE' FINISH OR EQUAL. CANOPIES MUST INCLUDE SIDE PANELS, 3'-6" ABOVE GROUND.

USE PAINTED #12 X 1" SELF-DRILLING SCREWS W/ RUBBER WASHERS TO FASTEN PANELS TO FRAME. USE (1) SCREW 1" ABOVE OR TO ONE SIDE OF EACH MAJOR RIB.

CONTRACTOR TO COORDINATE WITH MANUFACTURER TO VERIFY SELECTION OF CANOPY MODEL BASED ON LOCAL CONDITIONS

12 PROPANE CANOPY ELEVATION
SCALE: 1/4"=1'-0" — SIDE

NOTE: PROPANE CANOPY ROOF CANNOT COVER ANY PART OF TANK.

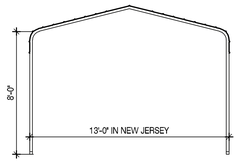

11 PROPANE CANOPY ELEVATION
SCALE: 1/4"=1'-0" — FRONT

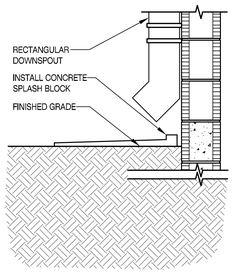

10 SECTION
SCALE = 1" = 1'-0" — @ DOWNSPOUT TO SPLASH BLOCK

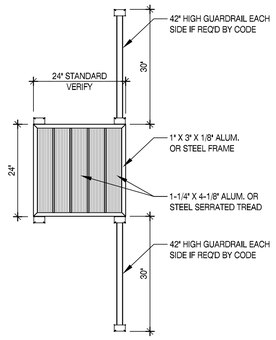

9 DETAIL
SCALE = 3/4" = 1'-0" — PLATFORM PLAN

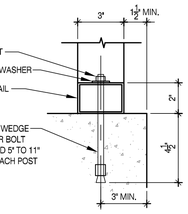

14 PROPANE CANOPY DETAIL
SCALE: 3"=1'-0" — CONNECTION @ CONCRETE

13 PROPANE CANOPY FRAME
SCALE: NOT TO SCALE — ISOMETRIC

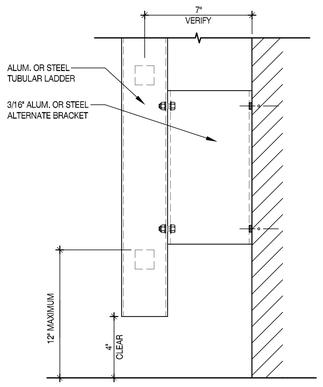

8 DETAIL
SCALE = 3" = 1'-0" — ALTERNATE BOTTOM SUPPORT

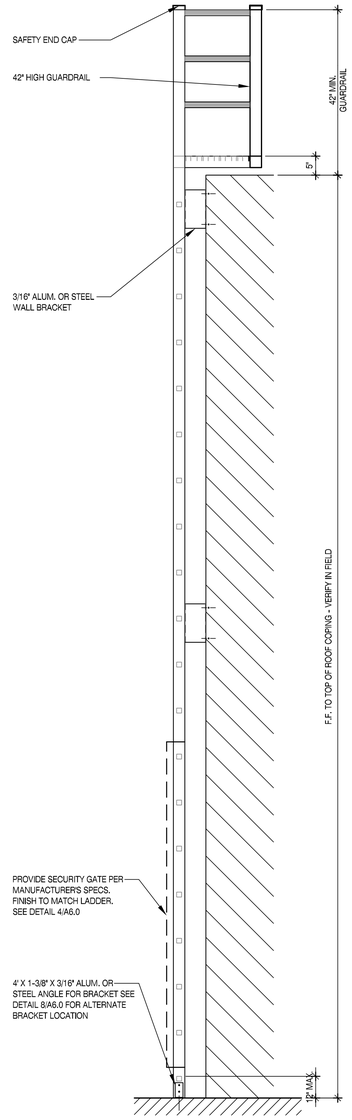

7 ELEVATION
SCALE = 3/4" = 1'-0" — @ ROOF ACCESS LADDER SIDE

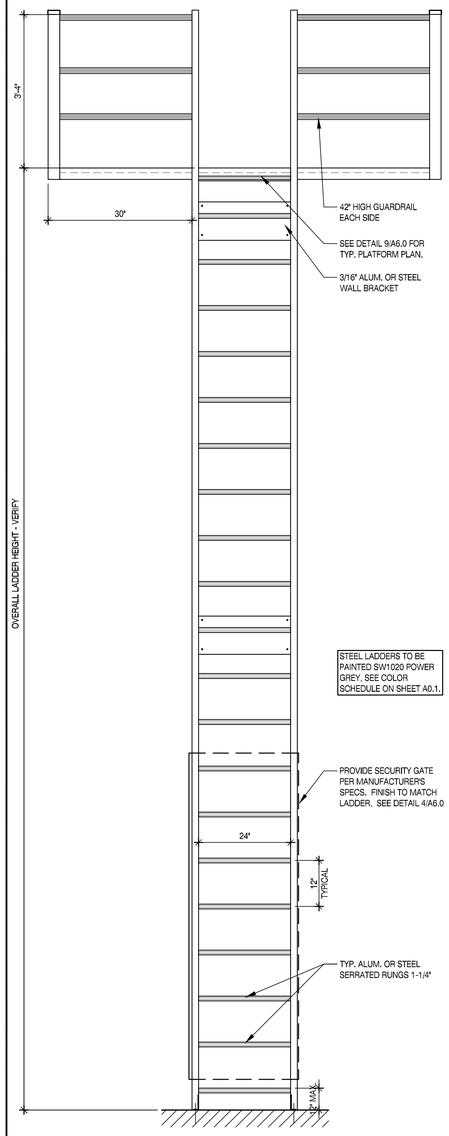

6 ELEVATION
SCALE = 3/4" = 1'-0" — @ ROOF ACCESS LADDER FRONT

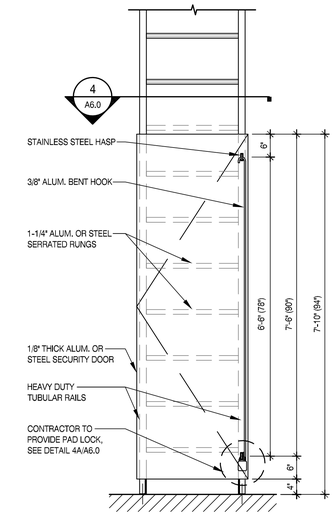

5 ELEVATION
SCALE = 3/4" = 1'-0" — @ SECURITY GATE

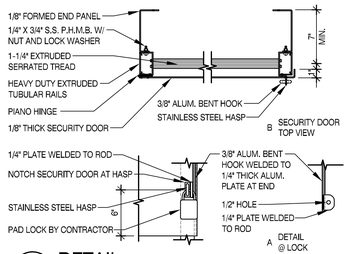

4 DETAIL
SCALE = 3" = 1'-0" — @ SECURITY GATE & LOCK

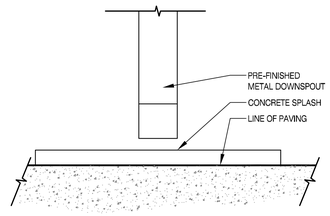

3 ELEVATION
SCALE = 1-1/2" = 1'-0" — TO UNDERGROUND

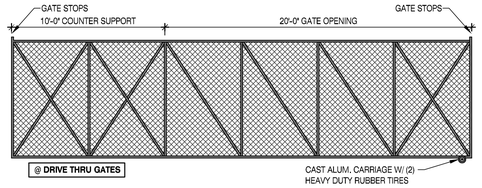

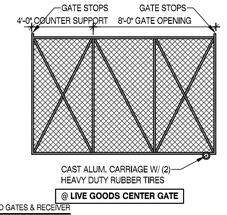

2 DETAIL
SCALE = 1/4" = 1'-0" — ROLLING CANTILEVERED GATES & RECEIVER

GATE OPERATOR INSTALLATION GUIDELINES:

1. CONTRACTOR IS TO ORDER AND INSTALL LIFTMASTER SL585 FOR AUTOMATIC OPERATION OF REAR GATE.
2. AUTOMATIC OPERATION SHALL INCLUDE FEEDBACK LOOP WITHIN FENCED DISPLAY AREA. COORDINATE PLACEMENT WITH STRIPED STOP BAR AND TSC PROJECT MANAGER.
3. INSTALL AND PROGRAM (2) RADIO REMOTE CONTROLS AND KEYPAD FOR MANUAL OVERRIDE. COORDINATE KEYPAD LOCATION WITH TSC PROJECT MANAGER.

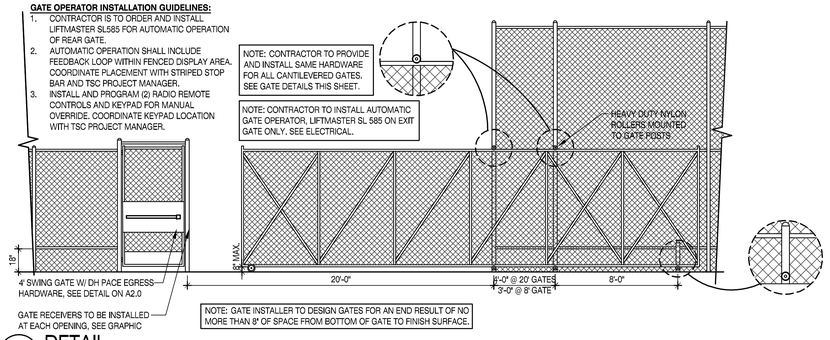

1 DETAIL
SCALE = 1/4" = 1'-0" — 20' ROLLING CANTILEVERED GATE @ GATE OPENING

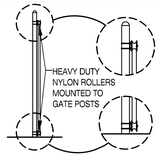

OXFORD ARCHITECTURE
2934 Sidco Drive
Suite 120
Nashville, TN 37204
Architecture
Planning
Interior Architecture

TSC

TRACTOR SUPPLY COMPANY

BOUTTE LOUISIANA

This drawing and the design shown is the property of the architect. The reproduction, copying or use of this drawing without their written consent is prohibited and any infringement will be subject to legal action

Job Number: 2428

Date: 07.23.2024

Revisions:

Revisions:

Revisions:

SECTIONS, DETAILS & ELEVATIONS

Sheet Number: A6.0

RECEIVING DESK

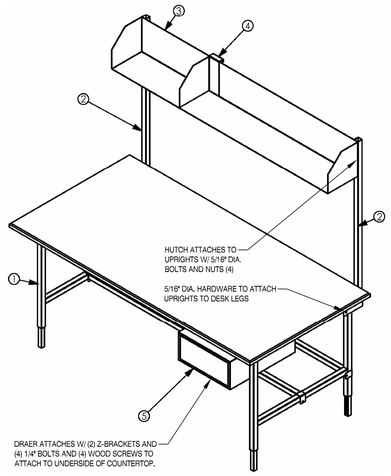

12 RECEIVING TABLE ISOMETRIC
SCALE: NONE

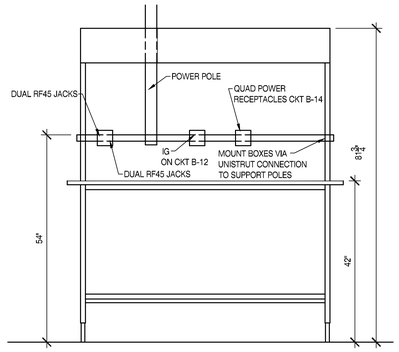

11 RECEIVING TABLE LAYOUT
SCALE: NONE

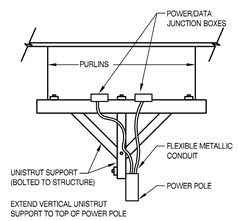

10 SERVICE AND DISPLAY COUNTER
SCALE: NONE

CASEWORK DAMAGE PROTOCOL

GC TO SEND E-MAIL TO TSC PM WITH DESCRIPTION, PICTURES, AND BILL OF XXXXXX

EXHIBIT H-1
TRAINING CERTIFICATION

INITIAL TSC STORE MANAGER	INITIAL GC	TRAINING HAS BEEN COMPLETED WITH THE STORE MANAGER BY THE GENERAL CONTRACTOR ON HOW TO USE, OPERATE AND MAINTAIN:
		THE IRRIGATION SYSTEM. ALSO, THE TSC STORE MANAGER HAS BEEN ADVISED THAT THE STORE IS RESPONSIBLE FOR MAINTAINING ALL LANDSCAPING STARTING AT EITHER FIXTURE DATE OR COMPLETION DATE, THE LATTER OF THE TWO DATES.
		THE LIGHT TIMER SYSTEM INCLUDING REVIEW OF THE SCHEDULE
		THE HVAC SYSTEM OPERATION INCLUDING HOW TO ADJUST THE PROGRAMMABLE THERMOSTATS.
		THE AUTOMATIC FRONT DOORS OPERATIONS INCLUDING SENSOR ADJUSTMENTS.
		THE OVERHEAD DOORS OPERATIONS INCLUDING TIMER, TIMER OVERIDE, AND SAFETY EDGE.
		THE DELAY EGRESS DOOR (THE RESET BUTTON IS IN THE CONTROL BOX AND HAS TO BE RESET ANY TIME POWER IS LOST).

STORE # _____ CITY/STATE _____

STORE MANAGER _____ GENERAL CONTRACTOR _____

COPY OF THIS EXECUTED DOCUMENT TO BE INCLUDED IN THE CLOSE OUT DOCUMENTS PROVIDED BY THE GENERAL CONTRACTOR (FOR RETRO FIT BY TENANT) OR LANDLORD (RETRO FIT BY LL AND GROUND UP PROJECTS) **TO TRACTOR SUPPLY COMPANY!**

9 EXHIBIT H-1 TRAINING CERTIFICATION

"U" REGISTER COUNTER

LANDLORD/ GENERAL CONTRACTOR RESPONSIBLE FOR RECEIVING/ PLACING AND ASSEMBLY OF ALL TENANT SUPPLIED MILLWORK.

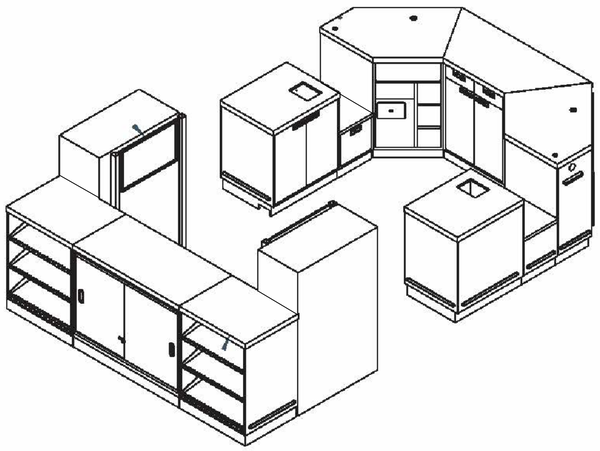

8 ISOMETRIC CHECK OUT COUNTER
SCALE: 1/2" = 1'-0"

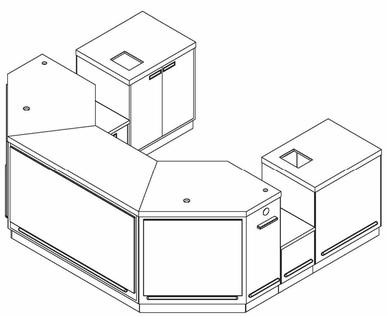

7 ISOMETRIC CHECK OUT COUNTER
SCALE: 1/2" = 1'-0"

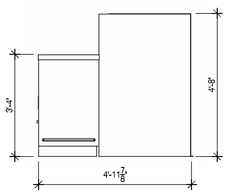

4 ELEVATION CHECK OUT COUNTER
SCALE: 1/2" = 1'-0"

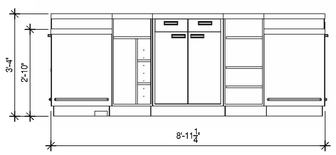

2 ELEVATION CHECK OUT COUNTER
SCALE: 1/2" = 1'-0"

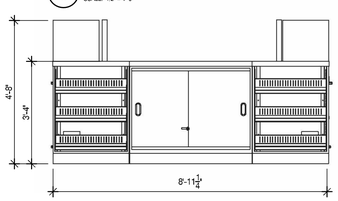

6 ELEVATION CHECK OUT COUNTER
SCALE: 1/2" = 1'-0"

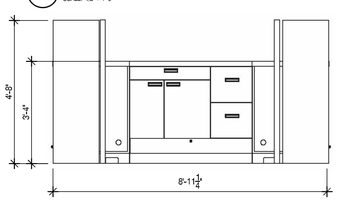

5 ELEVATION CHECK OUT COUNTER
SCALE: 1/2" = 1'-0"

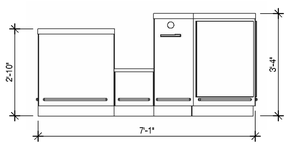

3 ELEVATION CHECK OUT COUNTER
SCALE: 1/2" = 1'-0"

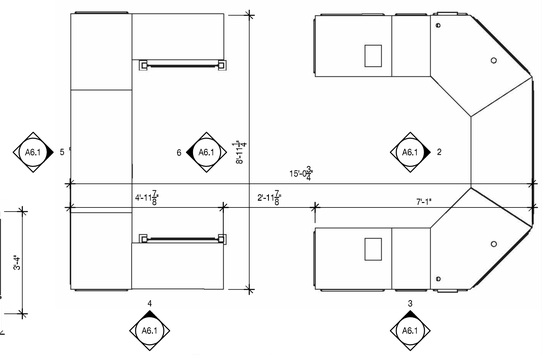

1 ENLARGED PLAN CHECK OUT COUNTER
SCALE: 1/2" = 1'-0"

OXFORD ARCHITECTURE

2934 Sidco Drive
Suite 120
Nashville, TN 37204

Architecture
Planning
Interior Architecture

TRACTOR SUPPLY COMPANY

BOUTTE
LOUISIANA

This drawing and the design shown is the property of the architect. The reproduction, copying or use of this drawing without their written consent is prohibited and any infringement will be subject to legal action

Job Number: 2428

Date: 07.23.2024

Revisions:

Revisions:

Revisions:
RECEIVING / SERVICE COUNTER DTLS

Sheet Number: A6.1

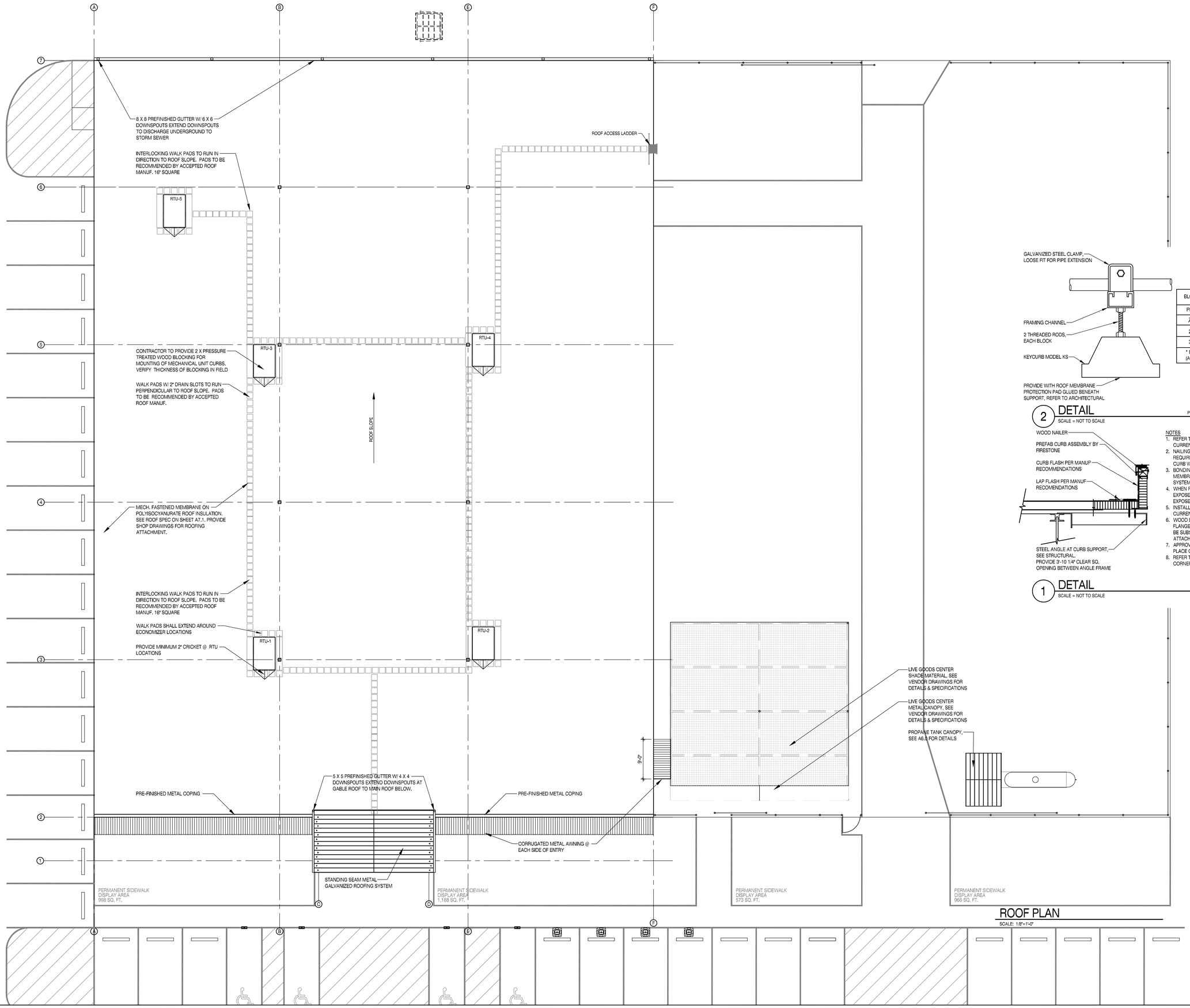

ROOF PLAN

SCALE: 1/8"=1'-0"

BLOCK SPACING CHART (METAL PIPE)	
PIPE SIZE	MAX SPACING
½" - 1½"	6'
2" - 2½"	10'
3" - 4"	12'
* BLOCK SPACING FOR PLASTIC PIPE (ALL SIZES) SHALL BE 4' MAX	

2 DETAIL

PIPE SUPPORTING

SCALE = NOT TO SCALE

NOTES

1. REFER TO FIRESTONE WEBSITE FOR MOST CURRENT INFORMATION.
2. NAILING AND METAL COUNTERFLASHING ARE NOT REQUIRED IF MEMBRANE IS RUN UP AND OVER CURB WALLS PRIOR TO INSTALLATION OF R.T.U.
3. BONDING ADHESIVE REQUIRED BETWEEN MEMBRANE AND INSULATION FOR FULLY ADHERED SYSTEMS.
4. WHEN REINFORCEMENT OF TPO MEMBRANE IS EXPOSED, REFER TO UT-LS-14 FOR CUT EDGE EXPOSED, REFER TO UT-LS-14 FOR CUT EDGE
5. INSTALL METAL WORK IN ACCORDANCE WITH CURRENT SMACNA RECOMMENDATIONS.
6. WOOD BLOCKING CAN BE USED BELOW CURB FLANGE (TO MATCH INSULATION THICKNESS) CAN BE SUBSTITUTED FOR STRUCTURAL CURB ATTACHMENT
7. APPROVED WOODEN CURBS CAN BE USED IN PLACE OF METAL CURBS
8. REFER TO STANDARD FIRESTONE DETAILS FOR CORNER FLASHING

1 DETAIL

@ R.T.U. CURB

SCALE = NOT TO SCALE

OXFORD ARCHITECTURE

2934 Sidco Drive
Suite 120
Nashville, TN 37204

Architecture
Planning
Interior Architecture

TSC

TRACTOR SUPPLY COMPANY

BOUTTE LOUISIANA

This drawing and the design shown is the property of the architect. The reproduction, copying or use of this drawing without their written consent is prohibited and any infringement will be subject to legal action

Job Number: 2428

Date: 07.23.2024

Revisions:

Revisions:

Revisions:

ROOF PLAN

Sheet Number: A7.0

SECTION 07500

MEMBRANE ROOFING
PART 1 GENERAL

1.01 SUMMARY

A. PROJECT NAME: TRACTOR SUPPLY.
B. FURNISH AND INSTALL ELASTOMERIC SHEET ROOFING SYSTEM, INCLUDING:
1. ROOFING MANUFACTURER'S REQUIREMENTS FOR THE SPECIFIED WARRANTY.
2. PREPARATION OF ROOFING SUBSTRATES.
3. WOOD NAILERS FOR ROOFING ATTACHMENT.
4. INSULATION.
5. ELASTOMERIC MEMBRANE ROOFING.
6. METAL ROOF EDGING AND COPINGS.
7. FLASHINGS.
8. WALKWAY PADS.
9. OTHER ROOFING-RELATED ITEMS SPECIFIED OR INDICATED ON THE DRAWINGS OR OTHERWISE NECESSARY TO PROVIDE A COMPLETE WEATHERPROOF ROOFING SYSTEM.
C. DISPOSAL OF DEMOLITION DEBRIS AND CONSTRUCTION WASTE IS THE RESPONSIBILITY OF CONTRACTOR. PERFORM DISPOSAL IN MANNER COMPLYING WITH ALL APPLICABLE FEDERAL, STATE, AND LOCAL REGULATIONS.
D. COMPLY WITH THE PUBLISHED RECOMMENDATIONS AND INSTRUCTIONS OF THE ROOFING MEMBRANE MANUFACTURER, AT HTTP://MANUAL.FSBP.COM.
E. COMMENCEMENT OF WORK BY THE CONTRACTOR SHALL CONSTITUTE ACKNOWLEDGEMENT BY THE CONTRACTOR THAT THIS SPECIFICATION CAN BE SATISFACTORILY EXECUTED, UNDER THE PROJECT CONDITIONS AND WITH ALL NECESSARY PREREQUISITES FOR WARRANTY ACCEPTANCE BY ROOFING MEMBRANE MANUFACTURER. NO MODIFICATION OF THE CONTRACT SUM WILL BE MADE FOR FAILURE TO ADEQUATELY EXAMINE THE CONTRACT DOCUMENTS OR THE PROJECT CONDITIONS.

1.02 REFERENCES

A. REFERENCED STANDARDS: THESE STANDARDS FORM PART OF THIS SPECIFICATION ONLY TO THE EXTENT THEY ARE REFERENCED AS SPECIFICATION REQUIREMENTS.
B. ASTM C 1289 - STANDARD SPECIFICATION FOR FACED RIGID CELLULAR POLYISOCYANURATE THERMAL INSULATION BOARD; 2004.
C. ASTM C 1549 - STANDARD TEST METHOD FOR DETERMINATION OF SOLAR REFLECTANCE NEAR AMBIENT TEMPERATURE USING A PORTABLE SOLAR REFLECTOMETER; 2004.
D. ASTM D 751 - STANDARD TEST METHODS FOR COATED FABRICS
E. ASTM D 1079 - STANDARD TERMINOLOGY RELATING TO ROOFING, WATERPROOFING, AND BITUMINOUS MATERIALS; 2005A.
F. ASTM D 6878 - STANDARD SPECIFICATION FOR THERMOPLASTIC POLYOLEFIN BASED SHEET ROOFING; 2003.
G. CAN-ULC-S770 - STANDARD TEST METHOD DETERMINATION OF L-TERM THERMAL RESISTANCE OF CLOSED-CELL THERMAL INSULATING FOAMS; 2003.
H. FM 1-28 - DESIGN WIND LOADS; FACTORY MUTUAL SYSTEM; 2002.
I. FM 1-29 - ROOF DECK SECUREMENT AND ABOVE DECK ROOF COMPONENTS; FACTORY MUTUAL SYSTEM; 2005.
K. SPRI ES-1 - WIND DESIGN STANDARD FOR EDGE SYSTEMS USED WITH LOW SLOPE ROOFING SYSTEMS; 2003. (ANSI/SPRI ES-1).

1.03 DEFINITIONS

A. ROOFING TERMINOLOGY: REFER TO ASTM D 1079 FOR DEFINITION OF TERMS RELATED TO ROOFING WORK NOT OTHERWISE DEFINED IN THE SECTION.
B. LTTR: LONG TERM THERMAL RESISTANCE, AS DEFINED BY CAN-ULC S770.

1.04 SUBMITTALS

A. PRODUCT DATA:
1. PROVIDE MEMBRANE MANUFACTURER'S PRINTED DATA SUFFICIENT TO SHOW THAT ALL COMPONENTS OF ROOFING SYSTEM, INCLUDING INSULATION AND FASTENERS, COMPLY WITH THE SPECIFIED REQUIREMENTS AND WITH THE MEMBRANE MANUFACTURER'S REQUIREMENTS AND RECOMMENDATIONS FOR THE SYSTEM TYPE SPECIFIED; INCLUDE DATA FOR EACH PRODUCT USED IN CONJUNCTION WITH ROOFING MEMBRANE.
2. WHERE UL OR FM REQUIREMENTS ARE SPECIFIED, PROVIDE DOCUMENTATION THAT SHOWS THAT THE ROOFING SYSTEM TO BE INSTALLED IS UL-CLASSIFIED OR FM-APPROVED, AS APPLICABLE; INCLUDE DATA ITEMIZING THE COMPONENTS OF THE CLASSIFIED OR APPROVED SYSTEM.
3. INSTALLATION INSTRUCTIONS: PROVIDE MANUFACTURER'S INSTRUCTIONS TO INSTALLER, MARKED UP TO SHOW EXACTLY HOW ALL COMPONENTS WILL BE INSTALLED; WHERE INSTRUCTIONS ALLOW INSTALLATION OPTIONS, CLEARLY INDICATE WHICH OPTION WILL BE USED.
B. SAMPLES: SUBMIT SAMPLES OF EACH PRODUCT TO BE USED.
C. SHOP DRAWINGS: PROVIDE:
1. THE ROOF MEMBRANE MANUFACTURER'S STANDARD DETAILS CUSTOMIZED FOR THIS PROJECT FOR ALL RELEVANT CONDITIONS, INCLUDING FLASHINGS, BASE TIE-INS, ROOF EDGES, TERMINATIONS, EXPANSION JOINTS, PENETRATIONS, AND DRAINS.
D. SPECIMEN WARRANTY: SUBMIT PRIOR TO STARTING WORK.
E. PRE-INSTALLATION NOTICE: COPY TO SHOW THAT MANUFACTURER'S REQUIRED PRE INSTALLATION NOTICE (PIN) HAS BEEN ACCEPTED AND APPROVED BY THE MANUFACTURER.
F. EXECUTED WARRANTY.

1.05 QUALITY ASSURANCE

A. APPLICATOR QUALIFICATIONS: ROOFING INSTALLER SHALL HAVE THE FOLLOWING:
1. CURRENT FIRESTONE MASTER CONTRACTOR STATUS.
2. AT LEAST FIVE YEARS EXPERIENCE IN INSTALLING SPECIFIED SYSTEM.

1.06 DELIVERY, STORAGE AND HANDLING

A. DELIVER PRODUCTS IN MANUFACTURER'S ORIGINAL CONTAINERS, DRY AND UNDAMAGED, WITH SEALS AND LABELS INTACT AND LEGIBLE.
B. STORE MATERIALS CLEAR OF GROUND AND MOISTURE WITH WEATHER PROTECTIVE COVERING.
C. KEEP COMBUSTIBLE MATERIALS AWAY FROM IGNITION SOURCES.

1.07 WARRANTY

A. COMPLY WITH ALL WARRANTY PROCEDURES REQUIRED BY MANUFACTURER, INCLUDING NOTIFICATIONS, SCHEDULING, AND INSPECTIONS.
B. WARRANTY: FIRESTONE 15 YEAR RED SHIELD LIMITED WARRANTY COVERING MEMBRANE, ROOF INSULATION, AND MEMBRANE ACCESSORIES.
1. LIMIT OF LIABILITY: NO DOLLAR LIMITATION.
2. SCOPE OF COVERAGE: REPAIR LEAKS IN THE ROOFING SYSTEM CAUSED BY:
a. ORDINARY WEAR AND TEAR OF THE ELEMENTS.
b. MANUFACTURING DEFECT IN FIRESTONE BRAND MATERIALS.
c. DEFECTIVE WORKMANSHIP USED TO INSTALL THESE MATERIALS.
d. DAMAGE DUE TO WINDS UP TO 55 MPH (88 KM/H).
3. NOT COVERED:
a. DAMAGE DUE TO WINDS IN EXCESS OF 55 MPH (88 KM/H).
b. DAMAGE DUE HURRICANES OR TORNADOES.
c. HAIL.
d. INTENTIONAL DAMAGE.
e. UNINTENTIONAL DAMAGE DUE TO NORMAL ROOFTOP INSPECTIONS, MAINTENANCE, OR SERVICE.

PART 2 PRODUCTS

2.01 MANUFACTURERS

A. ACCEPTABLE MANUFACTURER - ROOFING SYSTEM: FIRESTONE BUILDING PRODUCTS CO., INDIANAPOLIS, IN. WWW.FIRESTONEBPCO.COM.
1. ROOFING SYSTEMS MANUFACTURED BY OTHERS ARE ACCEPTABLE PROVIDED THE ROOFING SYSTEM IS COMPLETELY EQUIVALENT IN MATERIALS AND WARRANTY CONDITIONS AND THE MANUFACTURER MEETS THE FOLLOWING QUALIFICATIONS:
a. SPECIALIZING IN MANUFACTURING THE ROOFING SYSTEM TO BE PROVIDED.
b. MINIMUM TEN YEARS OF EXPERIENCE MANUFACTURING THE ROOFING SYSTEM TO BE PROVIDED.
c. ABLE TO PROVIDE A NO DOLLAR LIMIT, SINGLE SOURCE ROOF SYSTEM WARRANTY THAT IS BACKED BY CORPORATE ASSETS IN EXCESS OF ONE BILLION DOLLARS.
d. ISO 9002 CERTIFIED.
e. ABLE TO PROVIDE ISOCYANURATE INSULATION THAT IS PRODUCED IN OWN FACILITIES.
f. ROOFING SYSTEMS MANUFACTURED BY THE COMPANIES LISTED BELOW ARE ACCEPTABLE PROVIDED THEY ARE COMPLETELY EQUIVALENT IN MATERIALS AND WARRANTY CONDITIONS:
1) VERSICO
2) CARLISLE SYNTEC SYSTEMS.
3) GAF
B. MANUFACTURER OF INSULATION AND COVER BOARDS: SAME MANUFACTURER AS ROOF MEMBRANE.
C. MANUFACTURER OF METAL ROOF EDGING: SAME MANUFACTURER AS ROOF MEMBRANE.
1. METAL ROOF EDGING PRODUCTS BY OTHER MANUFACTURERS ARE NOT ACCEPTABLE.
D. SUBSTITUTION PROCEDURES: SEE INSTRUCTIONS TO BIDDERS.
1. SUBMIT EVIDENCE THAT THE PROPOSED SUBSTITUTION COMPLIES WITH THE SPECIFIED REQUIREMENTS.

2.02 ROOFING SYSTEM DESCRIPTION

A. ROOFING SYSTEM:
1. MEMBRANE: THERMOPLASTIC OLEFIN (TPO).
2. THICKNESS: AS SPECIFIED ELSEWHERE.
3. MEMBRANE ATTACHMENT: FULLY ADHERED.
4. COMPLY WITH APPLICABLE LOCAL BUILDING CODE REQUIREMENTS.
5. PROVIDE ASSEMBLY HAVING UNDERWRITERS LABORATORIES, INC. (UL) CLASS A FIRE HAZARD CLASSIFICATION.
6. PROVIDE ASSEMBLY COMPLYING WITH FACTORY MUTUAL CORPORATION (FM) ROOF ASSEMBLY CLASSIFICATION, FM DS 1-28 AND 1-29, AND MEETING MINIMUM REQUIREMENTS OF **FM 1-75** WIND UPLIFT RATING.
7. PROVIDE ASSEMBLY TO MEET THE FOLLOWING MINIMUM DESIGN UPLIFT-RESISTANCE CAPACITIES:
-SEE STRUCTURAL SHEET S5.0.

B. INSULATION:
1. TOTAL R VALUE: 25, MINIMUM.
2. MAXIMUM BOARD THICKNESS: 3.25 INCHES (63 MM); USE AS MANY LAYERS AS NECESSARY; STAGGER JOINTS IN ADJACENT LAYERS.
3. BASE LAYER: POLYISOCYANURATE FOAM BOARD, NON-COMPOSITE.
a. ATTACHMENT: LOOSE LAID, NO ATTACHMENT.
4. TOP LAYER: POLYISOCYANURATE FOAM BOARD, NON-COMPOSITE.
a. ATTACHMENT: MECHANICAL FASTENING.

2.03 TPO MEMBRANE MATERIALS (THIS PROJECT REQUIRES 45 MIL. MEMBRANE)

A. MEMBRANE: FLEXIBLE, HEAT WELDABLE SHEET COMPOSED OF THERMOPLASTIC POLYOLEFIN POLYMER AND ETHYLENE PROPYLENE RUBBER; COMPLYING WITH ASTM D 6878, WITH POLYESTER WEFT INSERTED REINFORCEMENT AND THE FOLLOWING ADDITIONAL CHARACTERISTICS:
1. THICKNESS: 0.045 INCH (1.14 MM) PLUS/MINUS 10 PERCENT, WITH COATING THICKNESS OVER REINFORCEMENT OF 0.015 INCH (0.38 MM) FOR 45 MIL PLUS/MINUS 10 PERCENT. REFER TO ASTM D7635 STANDARD TEST METHOD FOR MEASUREMENT OF THICKNESS OF COATINGS OVER FABRIC REINFORCEMENT.
2. SHEET WIDTH: PROVIDE SHEETS OF WIDTH NECESSARY TO ACCOMMODATE BATTEN SPACING REQUIRED BY MANUFACTURER FOR PROJECT CONDITIONS.
3. PUNCTURE RESISTANCE: 265 LBF (1174 N), MINIMUM, WHEN TESTED IN ACCORDANCE FTM 101C METHOD 2031.
4. SOLAR REFLECTANCE: 0.79, MINIMUM, WHEN TESTED IN ACCORDANCE WITH ASTM C 1549.
5. COLOR: WHITE.
6. ACCEPTABLE PRODUCT: ULTRAPLY TPO BY FIRESTONE.
B. MEMBRANE FASTENERS: TYPE AND SIZE AS REQUIRED BY ROOF MEMBRANE MANUFACTURER FOR ROOFING SYSTEM AND WARRANTY TO BE PROVIDED; USE ONLY FASTENERS FURNISHED BY ROOF MEMBRANE MANUFACTURER.
C. CURB AND PARAPET FLASHING: SAME MATERIAL AS MEMBRANE, WITH ENCAPSULATED EDGE WHICH ELIMINATES NEED FOR SEAM SEALING THE FLASHING-TO-ROOF SPLICE; PRECUT TO 18 INCHES (457 MM) WIDE.
D. FORMABLE FLASHING: NON-REINFORCED, FLEXIBLE, HEAT WELDABLE SHEET, COMPOSED OF THERMOPLASTIC POLYOLEFIN POLYMER AND ETHYLENE PROPYLENE RUBBER.
1. THICKNESS: 0.045 INCH (1.14 MM) PLUS/MINUS 10 PERCENT.
2. TENSILE STRENGTH: 1550 PSI (10.7 MPA), MINIMUM, WHEN TESTED IN ACCORDANCE WITH ASTM D 638 AFTER HEAT AGING.
3. ELONGATION AT BREAK: 650 PERCENT, MINIMUM, WHEN TESTED IN ACCORDANCE WITH ASTM D 638 AFTER HEAT AGING.
4. TEARING STRENGTH: 12 LBF (53 N), MINIMUM, WHEN TESTED IN ACCORDANCE WITH ASTM D 1004 AFTER HEAT AGING.
5. COLOR: WHITE.
6. ACCEPTABLE PRODUCT: ULTRAPLY TPO FLASHING BY FIRESTONE.
E. TAPE FLASHING: 5-1/2 INCH (140 MM) NOMINAL WIDE TPO MEMBRANE LAMINATED TO CURED RUBBER POLYMER SEAMING TAPE, OVERALL THICKNESS 0.065 INCH (1.6 MM) NOMINAL; TPO QUICKSEAM FLASHING BY FIRESTONE.
F. POURABLE SEALER: TWO-PART POLYURETHANE, TWO-COLOR FOR RELIABLE MIXING; POURABLE SEALER BY FIRESTONE.
G. SEAM PLATES: STEEL WITH BARBS AND GALVALUME COATING; CORROSION-RESISTANCE COMPLYING WITH FM 4470.
H. TERMINATION BARS: ALUMINUM BARS WITH INTEGRAL CAULK LEDGE; 1.3 INCHES (33 MM) WIDE BY 0.10 INCH (2.5 MM) THICK; FIRESTONE TERMINATION BAR BY FIRESTONE.
I. CUT EDGE SEALANT: SYNTHETIC RUBBER-BASED, FOR USE WHERE MEMBRANE REINFORCEMENT IS EXPOSED; ULTRAPLY TPO CUT EDGE SEALANT BY FIRESTONE.
J. GENERAL PURPOSE SEALANT: EPDM-BASED, ONE PART, WHITE GENERAL PURPOSE SEALANT; ULTRAPLY TPO GENERAL PURPOSE SEALANT BY FIRESTONE.
K. MOLDED FLASHING ACCESSORIES: UNREINFORCED TPO MEMBRANE PRE-MOLDED TO SUIT A VARIETY OF FLASHING DETAILS, INCLUDING PIPE BOOTS, INSIDE CORNERS, OUTSIDE CORNERS, ETC.; ULTRAPLY TPO SMALL AND LARGE PIPE FLASHING BY FIRESTONE.
L. ROOF WALKWAY PADS: NON-REINFORCED TPO WALKWAY PADS, 0.130 INCH (3 MM) BY 30 INCHES (760 MM) BY 50 FEET (15.24 M) LONG WITH PATTERNED TRAFFIC BEARING SURFACE; ULTRAPLY TPO WALKWAY PADS BY FIRESTONE.

2.04 ROOF INSULATION AND COVER BOARDS

A. POLYISOCYANURATE BOARD INSULATION: CLOSED CELL POLYISOCYANURATE FOAM WITH BLACK GLASS REINFORCED MAT LAMINATED TO FACES, COMPLYING WITH ASTM C 1289 TYPE I CLASS 1, WITH THE FOLLOWING ADDITIONAL CHARACTERISTICS:
1. THICKNESS: AS INDICATED ELSEWHERE.
2. SIZE: 48 INCHES (1220 MM) BY 96 INCHES (2440 MM), NOMINAL.
a. EXCEPTION: INSULATION TO BE ATTACHED USING ADHESIVE OR ASPHALT MAY BE NO LARGER THAN 48 INCHES (1220 MM) BY 48 INCHES (1220 MM), NOMINAL.
3. R-VALUE (LTTR):
a. 1.0 INCH (25 MM) THICKNESS: 5.6, MINIMUM.
b. 1.5 INCH (38 MM) THICKNESS: 8.5, MINIMUM.
c. 2.0 INCH (51 MM) THICKNESS: 11.4, MINIMUM.
d. 2.5 INCH (64 MM) THICKNESS: 14.4, MINIMUM.
4. COMPRESSIVE STRENGTH: 20 PSI (138 KPA) WHEN TESTED IN ACCORDANCE WITH ASTM C 1289.
5. OZONE DEPLETION POTENTIAL: ZERO; MADE WITHOUT CFC OR HCFC BLOWING AGENTS.
6. RECYCLED CONTENT: 19 PERCENT POST-CONSUMER AND 15 PERCENT POST-INDUSTRIAL, AVERAGE.
B. INSULATION FASTENERS: TYPE AND SIZE AS REQUIRED BY ROOF MEMBRANE MANUFACTURER FOR ROOFING SYSTEM AND WARRANTY TO BE PROVIDED; USE ONLY FASTENERS FURNISHED BY ROOF MEMBRANE MANUFACTURER.

2.05 METAL ACCESSORIES

A. METAL ROOF EDGING AND FASCIA: CONTINUOUS METAL EDGE MEMBER SERVING AS TERMINATION OF ROOF MEMBRANE AND RETAINER FOR METAL FASCIA; WATERTIGHT WITH NO EXPOSED FASTENERS; MOUNTED TO ROOF EDGE NAILER.
1. WIND PERFORMANCE:
a. MEMBRANE PULL-OFF RESISTANCE: 100 LBS/FT (1460 N/M), MINIMUM, WHEN TESTED IN ACCORDANCE WITH ANSI/SPRI ES-1 TEST METHOD RE-1, CURRENT EDITION.
b. FASCIA PULL-OFF RESISTANCE: AT LEAST THE MINIMUM REQUIRED WHEN TESTED IN ACCORDANCE WITH ANSI/SPRI ES-1 TEST METHOD RE-2, CURRENT EDITION.
c. PROVIDE PRODUCT LISTED IN CURRENT FACTORY MUTUAL RESEARCH CORPORATION APPROVAL GUIDE WITH AT LEAST FM 1-270 RATING.
2. DESCRIPTION: TWO-PIECE; EXTRUDED ALUMINUM T-SHAPED EDGE MEMBER SECURING TOP AND BOTTOM EDGES OF FLAT-FACED FORMED METAL FASCIA; FIRESTONE ANCHORGARD.
3. FASCIA FACE HEIGHT: 5 INCHES (127 MM).
4. EDGE MEMBER HEIGHT ABOVE NAILER: 1-1/4 INCHES (31 MM).
5. FASCIA MATERIAL AND FINISH: 0.040 INCH (1.0 MM) THICK FORMED ALUMINUM, NATURAL MILL FINISH; MATCHING CONCEALED JOINT SPLICE PLATES; FACTORY-INSTALLED PROTECTIVE PLASTIC FILM.
6. LENGTH: 120 INCHES (3048 MM).
7. FUNCTIONAL CHARACTERISTICS: FASCIA RETAINER SUPPORTS WHILE ALLOWING FOR FREE THERMAL CYCLING OF FASCIA.
8. ALUMINUM BAR: CONTINUOUS 6063-T6 ALLOY ALUMINUM EXTRUSION WITH PRE-PUNCHED SLOTTED HOLES; MITERS WELDED; INJECTION MOLDED EPDM SPLICES TO ALLOW THERMAL EXPANSION.
9. ANCHOR BAR CLEAT: 20 GAGE, 0.036 INCH (0.9 MM) G90 COATED COMMERCIAL TYPE GALVANIZED STEEL WITH PRE-PUNCHED HOLES.
10. CURVED APPLICATIONS: FACTORY MODIFIED.
11. FASTENERS: FACTORY-PROVIDED CORROSION RESISTANT FASTENERS, WITH DRIVERS; NO EXPOSED FASTENERS PERMITTED.
12. SPECIAL SHAPED COMPONENTS: PROVIDE FACTORY-FABRICATED PIECES NECESSARY FOR COMPLETE INSTALLATION, INCLUDING MITERS, SCUPPERS, AND END CAPS; MINIMUM 14 INCH (355 MM) LONG LEGS ON CORNER PIECES.
13. SCUPPERS: WELDED WATERTIGHT.
14. ACCESSORIES: PROVIDE MATCHING BRICK WALL CAP, DOWNSPOUT, EXTENDERS, AND OTHER SPECIAL FABRICATIONS AS SHOWN ON THE DRAWINGS.
B. PARAPET COPINGS: FORMED METAL COPING WITH GALVANIZED STEEL ANCHOR/SUPPORT CLEATS FOR CAPPING ANY PARAPET WALL; WATERTIGHT, MAINTENANCE FREE, WITHOUT EXPOSED FASTENERS; BUTT TYPE JOINTS WITH CONCEALED SPLICE PLATES; MECHANICALLY FASTENED AS INDICATED; FIRESTONE PTCF.
1. WIND PERFORMANCE:
a. AT LEAST THE MINIMUM REQUIRED WHEN TESTED IN ACCORDANCE WITH ANSI/SPRI ES-1 TEST METHOD RE-3, CURRENT EDITION.
b. PROVIDE PRODUCT LISTED IN CURRENT FACTORY MUTUAL RESEARCH CORPORATION APPROVAL GUIDE WITH AT LEAST FM 1-180 RATING.
2. DESCRIPTION: COPING SECTIONS ALLOWED TO EXPAND AND CONTRACT FREELY WHILE LOCKED IN PLACE ON ANCHOR CLEATS BY MECHANICAL PRESSURE FROM HARDENED STAINLESS STEEL SPRINGS FACTORY ATTACHED TO ANCHOR CLEATS; 8 INCH (200 MM) WIDE SPLICE PLATES WITH FACTORY APPLIED DUAL NON-CURING SEALANT STRIPS CAPABLE OF PROVIDING WATERTIGHT SEAL.
3. MATERIAL AND FINISH: 24 GA. THICK FORMED ALUMINUM, CLEAR ANODIZED FINISH; MATCHING CONCEALED JOINT SPLICE PLATES; FACTORY-INSTALLED PROTECTIVE PLASTIC FILM.
4. DIMENSIONS:
a. WALL WIDTH: AS INDICATED ON THE DRAWINGS.
b. PIECE LENGTH: MINIMUM 120 INCHES (3048 MM).
c. CURVED APPLICATION: FACTORY FABRICATED IN TRUE RADIUS.
5. ANCHOR/SUPPORT CLEATS: 20 GAGE, 0.036 INCH (0.9 MM) THICK PREPUNCHED GALVANIZED CLEAT WITH 12 INCH (305 MM) WIDE STAINLESS STEEL SPRING MECHANICALLY LOCKED TO CLEAT AT 72 INCHES (1820 MM) ON CENTER.
6. SPECIAL SHAPED COMPONENTS: PROVIDE FACTORY-FABRICATED PIECES NECESSARY FOR COMPLETE INSTALLATION, INCLUDING MITERS, CORNERS, INTERSECTIONS, CURVES, PIER CAPS, AND END CAPS; MINIMUM 14 INCH (355 MM) LONG LEGS ON CORNER, INTERSECTION, AND END PIECES.
7. FASTENERS: FACTORY-FURNISHED; ELECTROLYTICALLY COMPATIBLE; MINIMUM PULL OUT RESISTANCE OF 240 POUNDS (109 KG) FOR ACTUAL SUBSTRATE USED; NO EXPOSED FASTENERS.

PART 3 INSTALLATION

3.01 GENERAL

A. INSTALL ROOFING, INSULATION, FLASHINGS, AND ACCESSORIES IN ACCORDANCE WITH ROOFING MANUFACTURER'S PUBLISHED INSTRUCTIONS AND RECOMMENDATIONS FOR THE SPECIFIED ROOFING SYSTEM. WHERE MANUFACTURER PROVIDES NO INSTRUCTIONS OR RECOMMENDATIONS, FOLLOW GOOD ROOFING PRACTICES AND INDUSTRY STANDARDS. COMPLY WITH FEDERAL, STATE, AND LOCAL REGULATIONS.
B. OBTAIN ALL RELEVANT INSTRUCTIONS AND MAINTAIN COPIES AT PROJECT SITE FOR DURATION OF INSTALLATION PERIOD.

3.02 EXAMINATION

A. EXAMINE ROOF DECK TO DETERMINE THAT IT IS SUFFICIENTLY RIGID TO SUPPORT INSTALLERS AND THEIR MECHANICAL EQUIPMENT AND THAT DEFLECTION WILL NO STRAIN OR RUPTURE ROOF COMPONENTS OR DEFORM DECK.
B. VERIFY THAT SURFACES AND SITE CONDITIONS ARE READY TO RECEIVE WORK. CORRECT DEFECTS IN THE SUBSTRATE BEFORE COMMENCING WITH ROOFING WORK.
C. EXAMINE ROOF SUBSTRATE TO VERIFY THAT IT IS PROPERLY SLOPED TO DRAINS.
D. VERIFY THAT THE SPECIFICATIONS AND DRAWING DETAILS ARE WORKABLE AND NOT IN CONFLICT WITH THE ROOFING MANUFACTURER'S RECOMMENDATIONS AND INSTRUCTIONS; START OF WORK CONSTITUTES ACCEPTABLE OF PROJECT CONDITIONS AND REQUIREMENTS.
E. VERIFY THAT WOOD NAILERS HAVE BEEN PROPERLY INSTALLED.

3.03 PREPARATION

A. TAKE APPROPRIATE MEASURES TO ENSURE THAT FUMES FROM ADHESIVE SOLVENTS ARE NOT DRAWN INTO THE BUILDING THROUGH AIR INTAKES.
B. PRIOR TO PROCEEDING, PREPARE ROOF SURFACE SO THAT IT IS CLEAN, DRY, AND SMOOTH, AND FREE OF SHARP EDGES, FINS, ROUGHENED SURFACES, LOOSE OR FOREIGN MATERIALS, OIL, GREASE AND OTHER MATERIALS THAT MAY DAMAGE THE MEMBRANE.
C. FILL ALL SURFACE VOIDS IN THE IMMEDIATE SUBSTRATE THAT ARE GREATER THAN 1/4 INCH (6 MM) WIDE WITH FILL MATERIAL ACCEPTABLE INSULATION TO MEMBRANE MANUFACTURER.
D. SEAL, GROUT, OR TAPE DECK JOINTS, WHERE NEEDED, TO PREVENT BITUMEN SEEPAGE INTO BUILDING.

3.04 INSULATION AND COVER BOARD INSTALLATION

A. INSTALL INSULATION IN CONFIGURATION AND WITH ATTACHMENT METHOD(S) SPECIFIED IN PART 2, UNDER ROOFING SYSTEM.
B. INSTALL ONLY AS MUCH INSULATION AS CAN BE COVERED WITH THE COMPLETED ROOFING SYSTEM BEFORE THE END OF THE DAY'S WORK OR BEFORE THE ONSET OF INCLEMENT WEATHER.
C. LAY ROOF INSULATION IN COURSES PARALLEL TO ROOF EDGES.
D. NEATLY AND TIGHTLY FIT INSULATION TO ALL PENETRATIONS, PROJECTIONS, AND NAILERS, WITH GAPS NOT GREATER THAN 1/4 INCH (6 MM). FILL GAPS GREATER THAN 1/4 INCH (6 MM) WITH ACCEPTABLE INSULATION. DO NOT LEAVE THE ROOFING MEMBRANE UNSUPPORTED OVER A SPACE GREATER THAN 1/4 INCH (6 MM).
E. LOOSE LAID INSTALLATION: INSTALL INSULATION BY LAYING LOOSE OVER SUBSTRATE WITHOUT MECHANICAL SECUREMENT OF ANY KIND.
F. MECHANICAL FASTENING: USING SPECIFIED FASTENERS AND INSULATION PLATES ENGAGE FASTENERS THROUGH INSULATION INTO DECK TO DEPTH AND IN PATTERN REQUIRED BY FACTORY MUTUAL FOR FM CLASS SPECIFIED IN PART 2 AND MEMBRANE MANUFACTURER, WHICHEVER IS MORE STRINGENT.

3.05 ELASTOMERIC MEMBRANE INSTALLATION

A. BEGINNING AT LOW POINT OF ROOF, PLACE MEMBRANE WITHOUT STRETCHING OVER SUBSTRATE AND ALLOW TO RELAX AT LEAST 30 MINUTES BEFORE ATTACHMENT OR SPLICING; IN COLDER WEATHER ALLOW FOR LONGER RELAX TIME.
B. LAY OUT THE MEMBRANE PIECES SO THAT FIELD AND FLASHING SPLICES ARE INSTALLED TO SHED WATER.
C. INSTALL MEMBRANE WITHOUT WRINKLES AND WITHOUT GAPS OR FISHMOUTHS IN SEAMS; BOND AND TEST SEAMS AND LAPS IN ACCORDANCE WITH MEMBRANE MANUFACTURER'S INSTRUCTIONS AND DETAILS.
D. EDGE SECUREMENT: SECURE MEMBRANE AT ALL LOCATIONS WHERE MEMBRANE TERMINATES OR GOES THROUGH AN ANGLE CHANGE GREATER THAN 2 IN 12 INCHES (1:6) USING MECHANICALLY FASTENED REINFORCED PERIMETER FASTENING STRIPS, PLATES, OR METAL EDGING AS INDICATED OR AS RECOMMENDED BY ROOFING MANUFACTURER.
1. EXCEPTIONS: ROUND PIPE PENETRATIONS LESS THAN 18 INCHES (460 MM) IN DIAMETER AND SQUARE PENETRATIONS LESS THAN 4 INCHES (200 MM) SQUARE.
2. METAL EDGING IS NOT MERELY DECORATIVE; ENSURE ANCHORAGE OF MEMBRANE AS INTENDED BY ROOFING MANUFACTURER.

3.06 FLASHING AND ACCESSORIES INSTALLATION

A. INSTALL FLASHINGS, INCLUDING LAPS, SPLICES, JOINTS, BONDING, ADHESION, AND ATTACHMENT, AS REQUIRED BY MEMBRANE MANUFACTURER'S RECOMMENDATIONS AND DETAILS.
B. METAL ACCESSORIES: INSTALL METAL EDGINGS, GRAVEL STOPS, AND COPINGS IN LOCATIONS INDICATED ON THE DRAWINGS, WITH HORIZONTAL LEG OF EDGE MEMBER OVER MEMBRANE AND FLASHING OVER METAL ONTO MEMBRANE.
1. FOLLOW ROOFING MANUFACTURER'S INSTRUCTIONS.
2. REMOVE PROTECTIVE PLASTIC SURFACE FILM IMMEDIATELY BEFORE INSTALLATION.
3. INSTALL WATER BLOCK SEALANT UNDER THE MEMBRANE ANCHORAGE LEG.
4. FLASH WITH MANUFACTURER'S RECOMMENDED FLASHING SHEET UNLESS OTHERWISE INDICATED.
5. WHERE SINGLE APPLICATION OF FLASHING WILL NOT COMPLETELY COVER THE METAL FLANGE, INSTALL ADDITIONAL PIECE OF FLASHING TO COVER THE METAL EDGE.
6. IF THE ROOF EDGE INCLUDES A GRAVEL STOP AND SEALANT IS NOT APPLIED BETWEEN THE LAPS IN THE METAL EDGING, INSTALL AN ADDITIONAL PIECE OF SELF-ADHESIVE FLASHING MEMBRANE OVER THE METAL LAP TO THE TOP OF THE GRAVEL STOP; APPLY SEAM EDGE TREATMENT AT THE INTERSECTIONS OF THE TWO FLASHING SECTIONS.
7. WHEN THE ROOF SLOPE IS GREATER THAN 1:12, APPLY SEAM EDGE TREATMENT ALONG THE BACK EDGE OF THE FLASHING.
C. SCUPPERS: SET IN SEALANT AND SECURE TO STRUCTURE; FLASH AS RECOMMENDED BY MANUFACTURER.
D. ROOFING EXPANSION JOINTS: INSTALL AS SHOWN ON DRAWINGS AND AS RECOMMENDED BY ROOFING MANUFACTURER.
E. FLASHING AT WALLS, CURBS, AND OTHER VERTICAL AND SLOPED SURFACES: INSTALL WEATHERTIGHT FLASHING AT ALL WALLS, CURBS, PARAPETS, CURBS, SKYLIGHTS, AND OTHER VERTICAL AND SLOPED SURFACES THAT THE ROOFING MEMBRANE ABUTS TO; EXTEND FLASHING AT LEAST 8 INCHES (200 MM) HIGH ABOVE MEMBRANE SURFACE.
1. USE THE LONGEST PRACTICAL FLASHING PIECES.
2. EVALUATE THE SUBSTRATE AND OVERLAY AND ADJUST INSTALLATION PROCEDURE IN ACCORDANCE WITH MEMBRANE MANUFACTURER'S RECOMMENDATIONS.
3. COMPLETE THE SPLICE BETWEEN FLASHING AND THE MAIN ROOF SHEET WITH SPECIFIED SPLICE ADHESIVE BEFORE ADHERING FLASHING TO THE VERTICAL SURFACE.
4. PROVIDE TERMINATION DIRECTLY TO THE VERTICAL SUBSTRATE AS SHOWN ON ROOF DRAWINGS.
F. ROOF DRAINS:
1. TAPER INSULATION AROUND DRAIN TO PROVIDE SMOOTH TRANSITION FROM ROOF SURFACE TO DRAIN. USE SPECIFIED PRE-MANUFACTURED TAPERED INSULATION WITH FACER OR SUITABLE BONDING SURFACE TO ACHIEVE SLOPE; SLOPE NOT TO EXCEED MANUFACTURER'S RECOMMENDATIONS.
2. POSITION MEMBRANE, THEN CUT A HOLE FOR ROOF DRAIN TO ALLOW 1/2 TO 3/4 INCH (12 TO 19 MM) OF MEMBRANE TO EXTEND INSIDE CLAMPING RING PAST DRAIN BOLTS.
3. MAKE ROUND HOLES IN MEMBRANE TO ALIGN WITH CLAMPING BOLTS; DO NOT CUT MEMBRANE BACK TO BOLT HOLES.
4. APPLY SEALANT ON TOP OF DRAIN BOWL WHERE CLAMPING RING SEATS BELOW THE MEMBRANE
5. INSTALL ROOF DRAIN CLAMPING RING AND CLAMPING BOLTS; TIGHTEN CLAMPING BOLTS TO ACHIEVE CONSTANT COMPRESSION.
G. FLASHING AT PENETRATIONS: FLASH ALL PENETRATIONS PASSING THROUGH THE MEMBRANE; MAKE FLASHING SEALS DIRECTLY TO THE PENETRATION.
1. PIPES, ROUND SUPPORTS, AND SIMILAR ITEMS: FLASH WITH SPECIFIED PRE-MOLDED PIPE FLASHINGS WHEREVER PRACTICAL; OTHERWISE USE SPECIFIED SELF-CURING ELASTOMERIC FLASHING.
2. PIPE CLUSTERS AND UNUSUAL SHAPED PENETRATIONS: PROVIDE PENETRATION POCKET AT LEAST 2 INCHES (50 MM) DEEP, WITH AT LEAST 1 INCH (25 MM) CLEARANCE FROM PENETRATION, SLOPED TO SHED WATER.
3. STRUCTURAL STEEL TUBING: IF CORNER RADII ARE GREATER THAN 1/4 INCH (6 MM) AND LONGEST SIDE OF TUBE DOES NOT EXCEED 12 INCHES (305 MM), FLASH AS FOR PIPES; OTHERWISE, PROVIDE A STANDARD CURB WITH FLASHING.
4. FLEXIBLE AND MOVING PENETRATIONS: PROVIDE WEATHERTIGHT GOOSENECK SET IN SEALANT AND SECURED TO DECK, FLASHED AS RECOMMENDED BY MANUFACTURER.
5. HIGH TEMPERATURE SURFACES: WHERE THE IN-SERVICE TEMPERATURE IS, OR IS EXPECTED TO BE, IN EXCESS OF 180 DEGREES F (82 DEGREES C), PROTECT THE ELASTOMERIC COMPONENTS FROM DIRECT CONTACT WITH THE HOT SURFACES USING AN INTERMEDIATE INSULATED SLEEVE AS FLASHING SUBSTRATE AS RECOMMENDED BY MEMBRANE MANUFACTURER.

3.07 FINISHING AND WALKWAY INSTALLATION

A. INSTALL WALKWAYS AT ACCESS POINTS TO THE ROOF, AROUND ROOFTOP EQUIPMENT THAT MAY REQUIRE MAINTENANCE, AND WHERE INDICATED ON THE DRAWINGS.
B. WALKWAY PADS: ADHERE TO THE ROOFING MEMBRANE, SPACING EACH PAD AT MINIMUM OF 1.0 INCH (25 MM) AND MAXIMUM OF 3.0 INCHES (75 MM) FROM EACH OTHER TO ALLOW FOR DRAINAGE.
C. DO NOT START WORK UNTIL PRE-INSTALLATION NOTICE HAS BEEN SUBMITTED TO MANUFACTURER AS NOTIFICATION THAT THIS PROJECT REQUIRES A MANUFACTURER'S WARRANTY.
D. PERFORM WORK USING COMPETENT AND PROPERLY EQUIPPED PERSONNEL.
E. TEMPORARY CLOSURES, WHICH ENSURE THAT MOISTURE DOES NOT DAMAGE ANY COMPLETED SECTION OF THE NEW ROOFING SYSTEM, ARE THE RESPONSIBILITY OF THE APPLICATOR. COMPLETION OF FLASHINGS, TERMINATIONS, AND TEMPORARY CLOSURES SHALL BE COMPLETED AS REQUIRED TO PROVIDE A WATERTIGHT CONDITION.
F. INSTALL ROOFING MEMBRANE ONLY WHEN SURFACES ARE CLEAN, DRY, SMOOTH AND FREE OF SNOW OR ICE; DO NOT APPLY ROOFING MEMBRANE DURING INCLEMENT WEATHER OR WHEN AMBIENT CONDITIONS WILL NOT ALLOW PROPER APPLICATION; CONSULT MANUFACTURER FOR RECOMMENDED PROCEDURES DURING COLD WEATHER. DO NOT WORK WITH SEALANTS AND ADHESIVES WHEN MATERIAL TEMPERATURE IS OUTSIDE THE RANGE OF 60 TO 80 DEGREES F (15 TO 25 DEGREES C).
G. PROTECT ADJACENT CONSTRUCTION, PROPERTY, VEHICLES, AND PERSONS FROM DAMAGE RELATED TO ROOFING WORK; REPAIR OR RESTORE DAMAGE CAUSED BY ROOFING WORK.
1. PROTECT FROM SPILLS AND OVERSPRAY FROM BITUMEN, ADHESIVES, SEALANTS AND COATINGS.
2. PARTICULARLY PROTECT METAL, GLASS, PLASTIC, AND PAINTED SURFACES FROM BITUMEN, ADHESIVES, AND SEALANTS WITHIN THE RANGE OF WIND-BORNE OVERSPRAY.
3. PROTECT FINISHED AREAS OF THE ROOFING SYSTEM FROM ROOFING RELATED WORK TRAFFIC AND TRAFFIC BY OTHER TRADES.
H. UNTIL READY FOR USE, KEEP MATERIALS IN THEIR ORIGINAL CONTAINERS AS LABELED BY THE MANUFACTURER.
I. CONSULT MEMBRANE MANUFACTURER'S INSTRUCTIONS, CONTAINER LABELS, AND MATERIAL SAFETY DATA SHEETS (MSDS) FOR SPECIFIC SAFETY INSTRUCTIONS. KEEP ALL ADHESIVES, SEALANTS, PRIMERS AND CLEANING MATERIALS AWAY FROM ALL SOURCES OF IGNITION.
1. IF INSTALLATION OF WALKWAY PADS OVER FIELD FABRICATED SPLICES OR WITHIN 6 INCHES (150 MM) OF A SPLICE EDGE CANNOT BE AVOIDED, ADHERE ANOTHER LAYER OF FLASHING OVER THE SPLICE AND EXTENDING BEYOND THE WALKWAY PAD A MINIMUM OF 6 INCHES (150 MM) ON EITHER SIDE.
2. PRIME THE MEMBRANE, REMOVE THE RELEASE PAPER ON THE PAD, PRESS IN PLACE, AND WALK ON PAD TO ENSURE PROPER ADHESION.

3.08 FIELD QUALITY CONTROL

A. INSPECTION BY MANUFACTURER: PROVIDE FINAL INSPECTION OF THE ROOFING SYSTEM BY A TECHNICAL REPRESENTATIVE EMPLOYED BY ROOFING SYSTEM MANUFACTURER SPECIFICALLY TO INSPECT INSTALLATION FOR WARRANTY PURPOSES (I.E. NOT A SALES PERSON).
B. PERFORM ALL CORRECTIONS NECESSARY FOR ISSUANCE OF WARRANTY.

3.09 CLEANING

A. CLEAN ALL CONTAMINANTS GENERATED BY ROOFING WORK FROM BUILDING AND SURROUNDING AREAS, INCLUDING BITUMEN, ADHESIVES, SEALANTS, AND COATINGS.
B. REPAIR OR REPLACE BUILDING COMPONENTS AND FINISHED SURFACES DAMAGED OR DEFACED DUE TO THE WORK OF THIS SECTION; COMPLY WITH RECOMMENDATIONS OF MANUFACTURERS OF COMPONENTS AND SURFACES.
C. REMOVE LEFTOVER MATERIALS, TRASH, DEBRIS, EQUIPMENT FROM PROJECT SITE AND SURROUNDING AREAS.

3.10 PROTECTION

A. WHERE CONSTRUCTION TRAFFIC MUST CONTINUE OVER FINISHED ROOF MEMBRANE, PROVIDE DURABLE PROTECTION AND REPLACE OR REPAIR DAMAGED ROOFING TO ORIGINAL CONDITION.

END OF SECTION

NOTE: TRACTOR SUPPLY COMPANY REQUIRES THE ROOFING MEMBRANE TO BE WHITE

ROOF SPECIFICATIONS

OXFORD ARCHITECTURE
2934 Sidco Drive
Suite 120
Nashville, TN 37204
Architecture
Planning
Interior Architecture

TRACTOR SUPPLY COMPANY
BOUTTE
LOUISIANA

This drawing and the design shown is the property of the architect. The reproduction, copying or use of this drawing without their written consent is prohibited and any infringement will be subject to legal action

Job Number: 2428
Date: 07.23.2024
Revisions:
Revisions:
Revisions:
ROOF SPECIFICATIONS
Sheet Number: A7.1

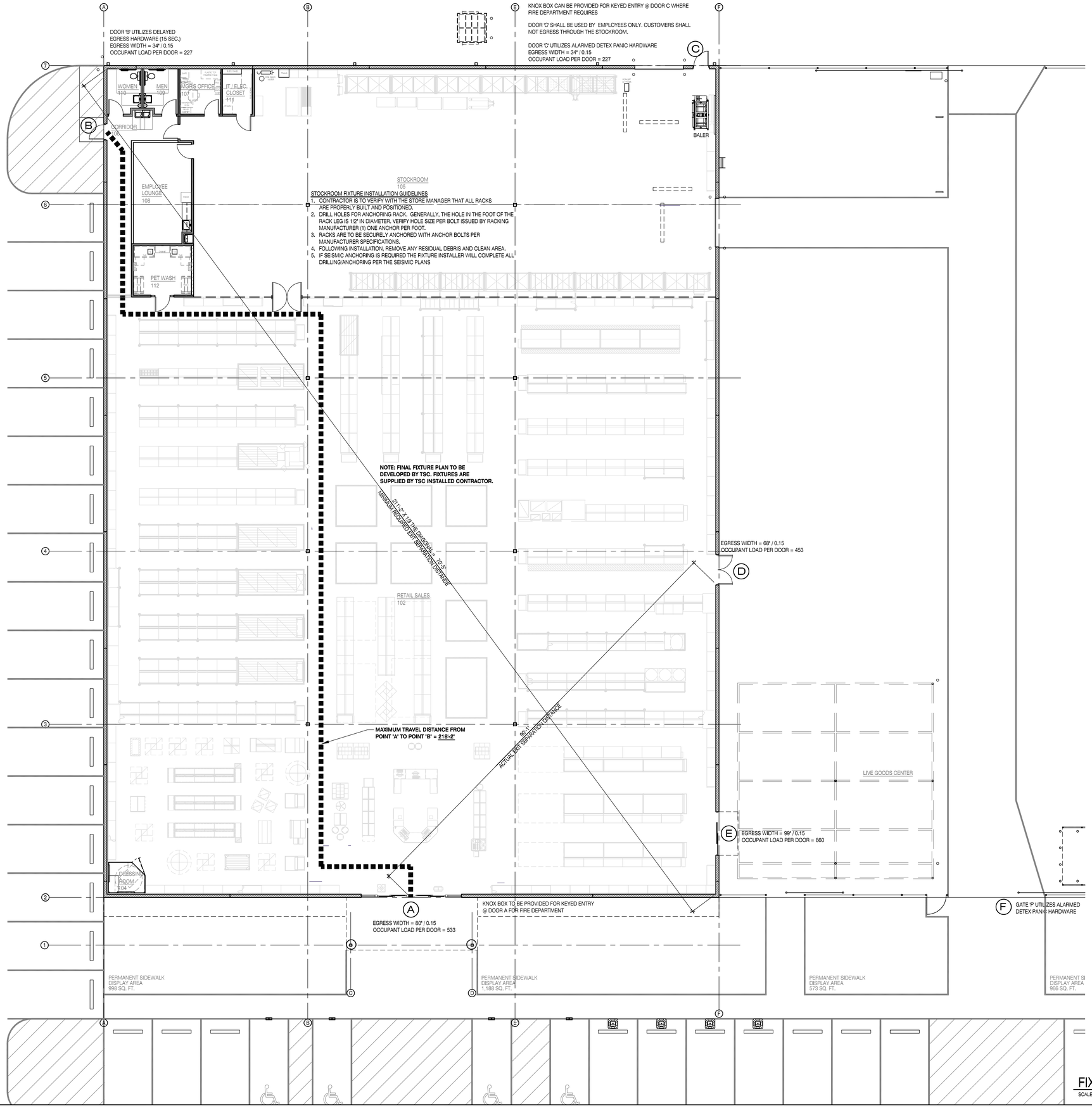

MAXIMUM FLOOR AREA ALLOWANCES PER OCCUPANT

2021 IBC - TABLE 1004.5

FUNCTION OF SPACE	FLOOR AREA IN SQ. FT. PER OCCUPANT
BUSINESS AREAS	150 GROSS
MERCANTILE STORAGE, STOCK, SHIPPING AREAS	60 GROSS 300 GROSS

EGRESS WIDTH PER OCCUPANT LOAD

2021 IBC - SECTION 1005.3.2

OCCUPANCY	WITHOUT SPRINKLER SYSTEM		WITH SPRINKLER SYSTEM	
	STAIRWAYS (INCHES PER OCCUPANT)	OTHER EGRESS COMPONENTS (INCHES PER OCCUPANT)	STAIRWAYS (INCHES PER OCCUPANT)	OTHER EGRESS COMPONENTS (INCHES PER OCCUPANT)
OCCUPANCIES OTHER THAN THOSE LISTED BELOW	0.3	0.2	0.2	0.15
HAZARDOUS: H-1, H-2, H-3 AND H-4	0.7	0.4	0.3	0.2
INSTITUTIONAL: I-2	N/A	N/A	0.3	0.2

EGRESS ACCESS TRAVEL DISTANCE

2021 IBC - TABLE 1017.2

OCCUPANCY	WITHOUT SPRINKLER SYSTEM (FEET)	WITH SPRINKLER SYSTEM (FEET)
M	200	250
B	200	300

PROJECT DATA

THIS PROJECT IS BASED ON THE REQUIREMENTS OF THE LOUISIANA STATE UNIFORM CONSTRUCTION CODE WHICH IS BASED UPON THE FOLLOWING:

2021 INTERNATIONAL BUILDING CODE W/ LOCAL AMENDMENTS)
2021 INTERNATIONAL PLUMBING CODE (ADOPTS WITH AMENDMENTS IPC 2015)
2021 INTERNATIONAL MECHANICAL CODE (ADOPTS WITH AMENDMENTS IMC 2015)
2021 INTERNATIONAL FUEL AND GAS CODE
2020 NATIONAL ELECTRIC CODE
2021 INTERNATIONAL ENERGY CONSERVATION CODE

OCCUPANCY CLASSIFICATION: M / S-1 - NON-SEPARATED MIXED USE

CONSTRUCTION TYPE: IIB

FIRE SUPRESSION: SPRINKLERED

BUILDING AREA LIMITS			OCCUPANCY LOAD
RETAIL SALES	=	15,416 SQ. FT. / 60	= 256.9 OR 257
OFFICE CORE & WALLS	=	1,341 SQ. FT. / 150	= 8.94 OR 9
STOCKROOM	=	2,899 SQ. FT. / 300	= 9.65 OR 10
FEED CENTER	=	2,050 SQ. FT. / 300	= 6.83 OR 7
TOTAL BUILDING AREA	=	21,702 SQ. FT.	
TOTAL OCCUPANT LOAD	=		= 283

BUILDING HEIGHT: 1 STORY - 21'-4" A.F.F. @ FRONT MASONRY WALL 30'-8" @ GABLE FACADE

ALLOWABLE AREA CALCULATIONS:
Aa = At + [At x If] + [At x Ia]
Aa = 12,500 + [12,500 x 0] + [12,500 x 3]
Aa = 12,500 + [0] + [37,500]
Aa = 50,000 SQ. FT.
Aa = 50,000 SQ. FT. > 21,702 SQ. FT.

LIFE SAFETY DATA

ITEM	REQUIRED	PROVIDED
EXIT / EGRESS	283 X 0.15 = 43"	315"
MAX. TRAVEL DISTANCE	250'-0"	218'-2"
NUMBER OF SALES EXITS	2	3
NUMBER OF TENANT EXITS	3	4
MIN. EXIT SEPARATION	70'-5"	90'-1"

FIXTURE/LIFE SAFETY PLAN

SCALE: 1/8"=1'-0"

OXFORD ARCHITECTURE
2934 Sidco Drive
Suite 120
Nashville, TN 37204
Architecture
Planning
Interior Architecture

TRACTOR SUPPLY COMPANY

BOUTTE LOUISIANA

This drawing and the design shown is the property of the architect. The reproduction, copying or use of this drawing without their written consent is prohibited and any infringement will be subject to legal action

Job Number: 2428

Date: 07.23.2024

Revisions:

Revisions:

Revisions:

LIFE SAFETY / FIXTURE PLAN

Sheet Number: A8.0

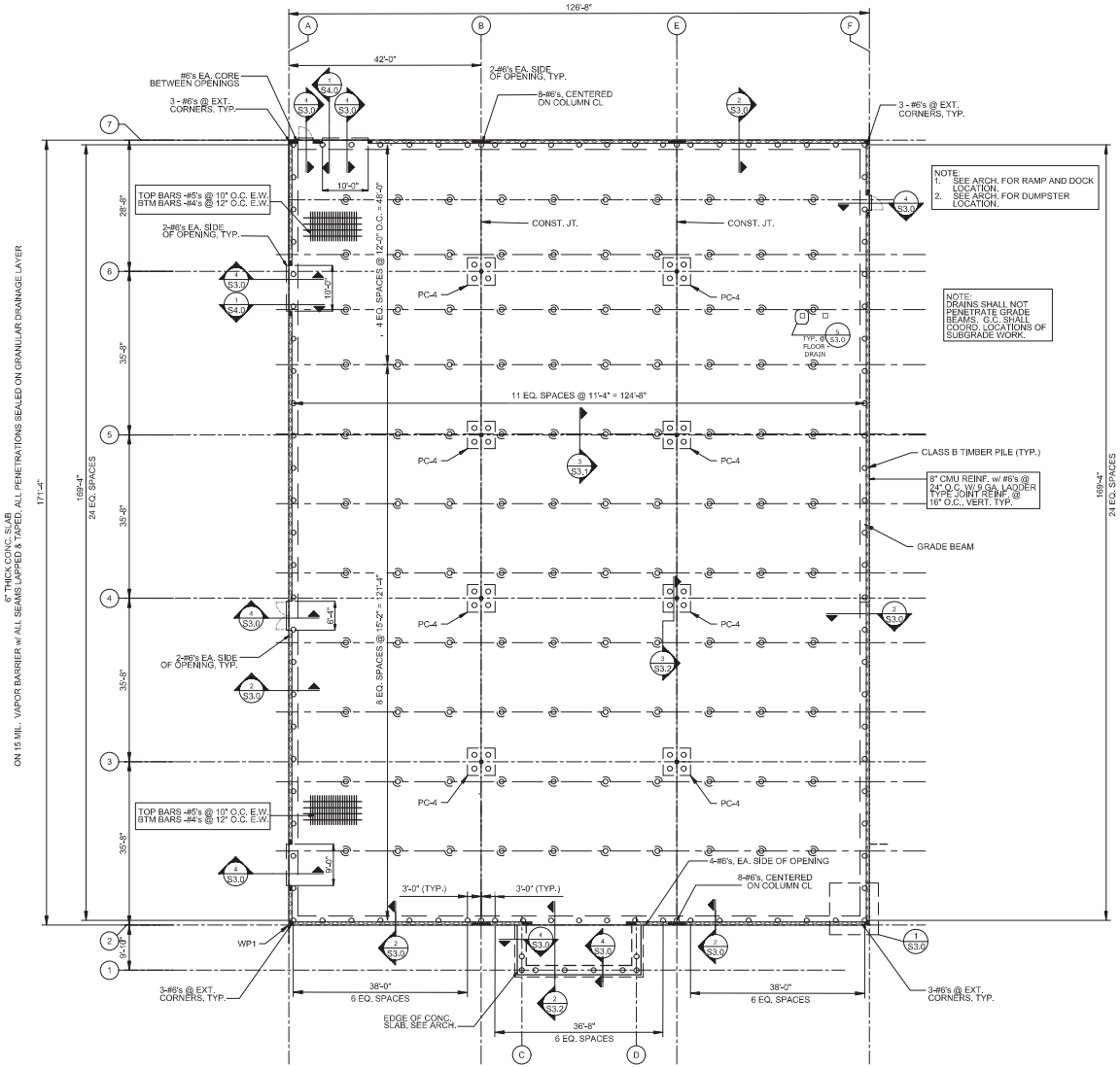

A TYP. FOUNDATION PLAN
SCALE: 3/32" = 1'-0"

	STRUCTURAL SHEET INDEX
SHEET NO.	SHEET NAME
S1.0	FOUNDATION PLAN
S2.0	ROOF FRAMING PLAN
S2.1	ROOF FRAMING PLAN, CONT.
S3.0	STRUCTURAL DETAILS
S3.1	STRUCTURAL DETAILS
S3.2	STRUCTURAL DETAILS
S4.0	STRUCTURAL DETAILS
S4.1	STRUCTURAL DETAILS
S4.2	STRUCTURAL DETAILS
S5.0	GENERAL NOTES
S5.1	GENERAL NOTES
S5.2	GENERAL NOTES
S5.3	ABBREVIATIONS & WIND LOADS
S5.4	CONCRETE SPECIFICATIONS

LEGEND:

- CLASS B TIMBER PILE
- PILE C/L
- COLUMN C/L

NOTE:
1. SEE S3.1 FOR PILE CAP PC-4 PLAN AND DETAILS
2. ALL PILES ARE 55' LONG TREATED TIMBER (0.8CCA) MEETING ASTM D25 SPECIFICATIONS.

NOTE:
1. UNDERCUT, FILL, PREPARE, TEST, AND REMEDIATE ALL SUBGRADE AS RECOMMENDED IN THE GEOTECHNICAL REPORT.
2. VERIFY SOIL BELOW SLAB AND FOOTINGS WITH GEOTECHNICAL ENGINEER PRIOR TO PLACEMENT. SEE GEOTECHNICAL REPORT.
3. PILES LOCATED MORE THAN 3" OUTSIDE OF DESIGNATED LOCATION ON PLAN AFTER DRIVING SHALL BE REPORTED TO E.O.R. IMMEDIATELY. ADDITIONAL ANALYSIS MAY BE REQUIRED.

1 FOUNDATION PLAN
SCALE: 3/32" = 1'-0"

NOTES:

1. TOP OF FOOTING:
   A. EXTERIOR GRADE BEAM = -24" MINIMUM BELOW FINISH FLOOR OR GRADE, WHICHEVER IS LOWER.
   B. ALL BUILDING FONDATIONS ARE DESIGNED TO BEAR ON TIMBER PILES. SEE GEOTECHNICAL REPORT.
2. THE CONTRACTOR SHALL COORDINATE ANY UNDER SLAB PIPING, CONDUITS, AND/ OR UTILITIES PRIOR TO PLACING FOOTINGS. IMMEDIATELY REPORT ANY CONFLICTS TO THE ENGINEER.
3. DOWELS SHOWN ON PLAN INDICATE GROUT FILLED REINFORCED CORES. SEE DETAIL 8 / S3.0 & 10 / S3.0
4. SEE 5 / S3.0 & 7 / S3.0 FOR ADDITIONAL REINFORCING AT WALL JOINTS. SEE ARCHITECTURAL DRAWINGS FOR CONTROL JOINT LOCATIONS.
5. SEE DETAILS 4 / S4.2 , 5 / S4.2 , AND 6 S4.2 FOR FOOTING CONDITIONS ADJACENT TO PLUMBING, ELECTRICAL, AND FIRE PROTECTION SYSTEMS.

BRETT GREENE ARCHITECT
2934 Sidco Drive
Suite 120
Nashville, TN 37204
Architecture
Planning
Interior Architecture

TRACTOR SUPPLY COMPANY
HOUMA
LOUISIANA

This drawing and the design shown is the property of the architect. The reproduction, copying or use of this drawing without their written consent is prohibited and any infringement will be subject to legal action.

Job Number: 2485
Date: 01.20.2025
Revisions:
Revisions:
Revisions:

STATE OF LOUISIANA
DANIEL A. FLORES GUEVARA
License No. 0003154
Feb 28, 2025
PROFESSIONAL ENGINEER

FOUNDATION PLAN
Sheet Number: S1.0

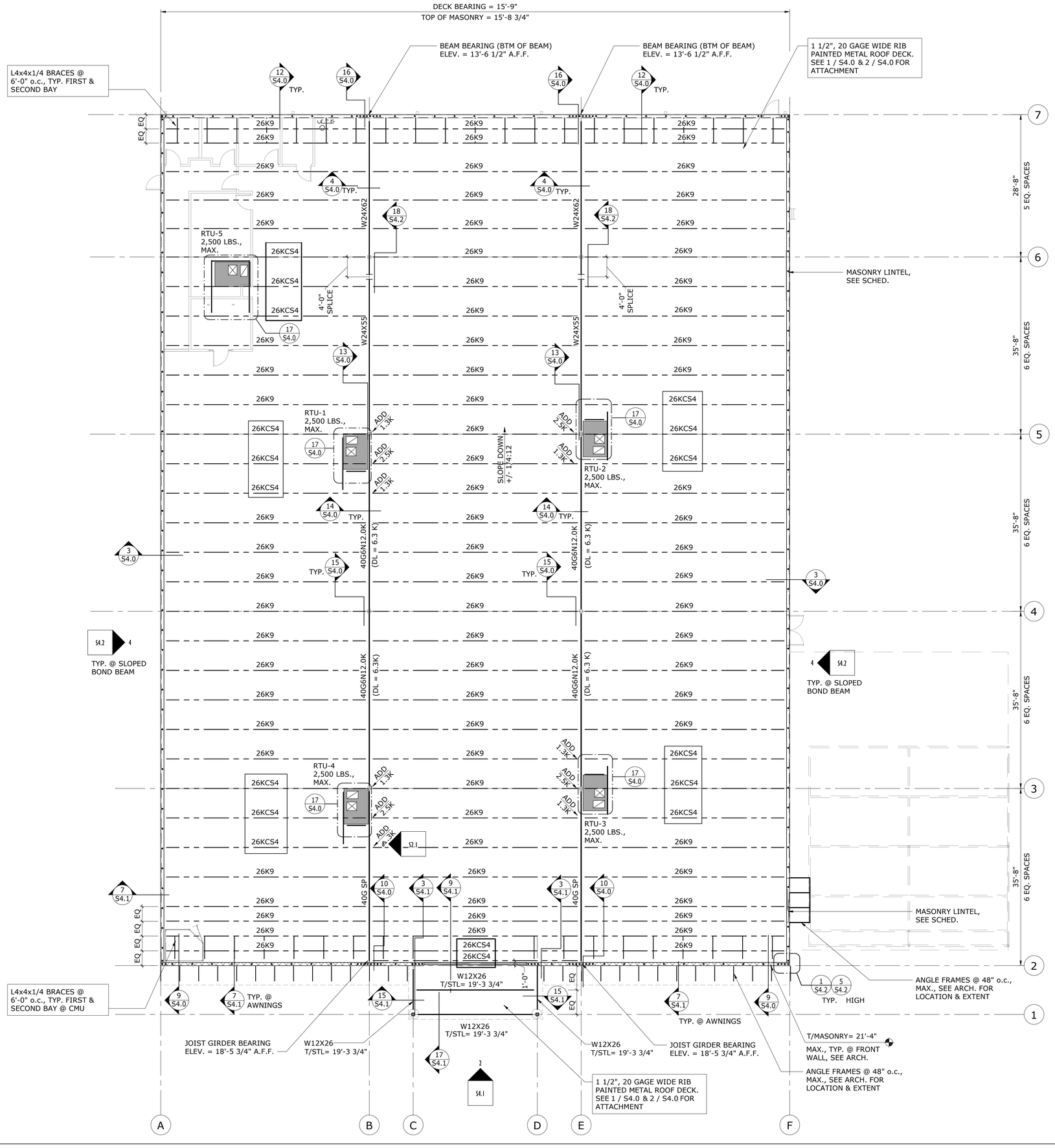

1 ROOF FRAMING PLAN

SCALE: 1/8" = 1'-0"

NOTES:

1. JOIST BEARING ELEVATION VARIES.
2. ALL ROOF JOISTS TO HAVE 2 1/2" DEEP SEATS (U.N.O.)
3. HORIZONTAL BRIDGING REQUIRED FOR ALL BAR JOISTS PER SJI CODE OF STANDARD PRACTICE.
4. SEE ARCHITECTURAL DRAWINGS FOR LOCATIONS OF BEARING WALLS AND DIMENSIONS NOT SHOWN.
5. BAR JOISTS SUPPORTING ROOF TOP UNITS HAVE BEEN DESIGNED TO CARRY THE ADDITIONAL LOAD INDICATED ON THE PLAN. PRIOR TO ORDERING JOISTS, VERIFY THE RTU EQUIPMENT COMPLIES WITH THE DESIGN ASSUMPTIONS SHOWN ON THE DRAWINGS.
6. SEE DETAIL 17 / S4.0 FOR RTU SUPPORT FRAMING.
7. SEE DETAIL 18 / S4.0 FOR ROOF OPENING FRAMING.
8. REFER TO SHEET S5 FOR WIND UPLIFT PRESSURES FOR JOIST AND JOIST GIRDER DESIGNS.
9. STRUCTURAL DESIGN IS BASED ON THE MAIN BUILDING INCLUDING A FRONT PARAPET ONLY. NO REAR OR SIDE PARAPETS ARE TO BE PROVIDED. IF PROVISIONS CHANGE, NOTIFY ARCHITECT IN WRITING PRIOR TO COMMENCING WORK.
10. SEE DETAIL 19 / S4.0 FOR ADDITONAL REINFORCING @ NON-PANEL POINTS JOIST LOADING.
11. LOADS ON JOIST GIRDERS ARE PROVIDED AS ASD VALUES.
12. SEE 13 / S2.1 FOR STANDARD LINTEL SCHEDULE.

OXFORD ARCHITECTURE

2934 Sidco Drive
Suite 120
Nashville, TN 37204

Architecture
Planning
Interior Architecture

bennett&pless
formerly WiSEngineers
Experience Structural Expertise
Atlanta, Boca Raton, Charlotte, Chattanooga, Knoxville, Nashville, Orlando, Raleigh
1964 - 2024 Celebrating 60 Years of Structural Excellence
565 Marriott Drive, Suite 300
Nashville, Tennessee 37214
Tel 615 782 0100

Copyright 2024 • Bennett & Pless, Inc.
All Rights Reserved

B & P Job Number 24.02.117

TSC

TRACTOR SUPPLY COMPANY

BOUTTE LOUISIANA

This drawing and the design shown is the property of the architect. The reproduction, copying or use of this drawing without their written consent is prohibited and any infringement will be subject to legal action

Job Number: ??

Date: 07.18.2024

Revisions:

Revisions:

Revisions:

ROOF FRAMING PLAN

Sheet Number: S2.0

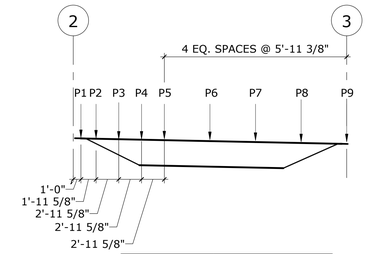

DESIGNATION	TOTAL LOAD (KIPS)
P1	4.9 K
P2	5.4 K
P3	5.5 K
P4	5.7 K
P5	8.6 K
P6	11.4 K
P7	11.4 K
P8	11.4 K
P9	11.4 K

NOTE:
1. ABOVE LOADS DO NOT CONTAIN ADDITIONAL LOADS FROM RTU'S. RTU LOADING IS ADDITIONAL, SEE ROOF FRAMING PLAN
2. SEE JOIST GIRDER FOR LOADING & PANEL POINT REQUIREMENTS.

8 40G SP LOAD DIAGRAM
SCALE: 1/8" = 1'-0"

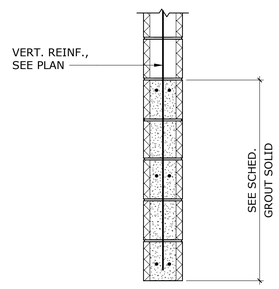

BOND BEAM LINTEL

OPENINGS UP TO 6'-0"		
WALL SIZE	LINTEL TYPE	REMARKS
8" BLOCK	8" x 8" BOND BM. w/ 1- #5, TOP & BTM.	

OPENINGS 6'-1" TO 8'-0"		
WALL SIZE	LINTEL TYPE	REMARKS
8" BLOCK	8" x 16" BOND BM. w/ 1- #6, TOP & BTM.	

OPENINGS 8'-1" TO 10'-0"		
WALL SIZE	LINTEL TYPE	REMARKS
8" BLOCK	8" x 24" BOND BM. w/ 2- #5's TOP, MIDDLE, & BTM.	MIN. BRG - 16", EA. SIDE FEED ROOM OPENING IS LIMITED TO 10'-0"

OPENINGS 10'-1" TO 12'-0"		
WALL SIZE	LINTEL TYPE	REMARKS
8" BLOCK	8" x 40" BOND BM. w/ 2- #6's, TOP, MIDDLE & BTM.	MIN. BRG - 16", EA. SIDE EXTERIOR OPENINGS ONLY

13 LINTEL SCHEDULE
SCALE: NONE

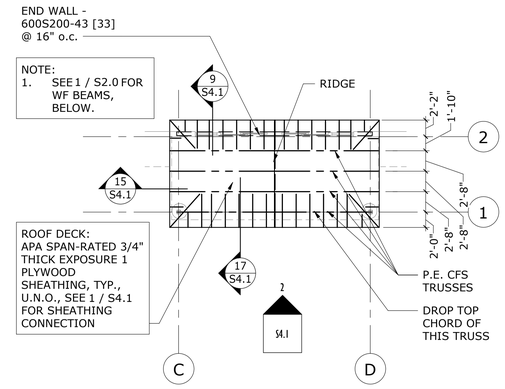

NOTES:
1. TOP OF STEEL ELEV. = SEE 1 / S2.0 .
2. SEE ARCHITECTURAL DRAWINGS FOR LOCATION OF BEARING WALLS AND DIMENSIONS NOT SHOWN.
3. ROOF TRUSSES SHALL BEAR AT SIDE BEAMS.
4. **BLOCKING TRUSSES SHALL HAVE A UNIFORM LATERAL CAPACITY OF 0.50 K/FT (ASD).**

6 HIGH ENTRY FRAMING PLAN
SCALE: 1/8" = 1'-0"

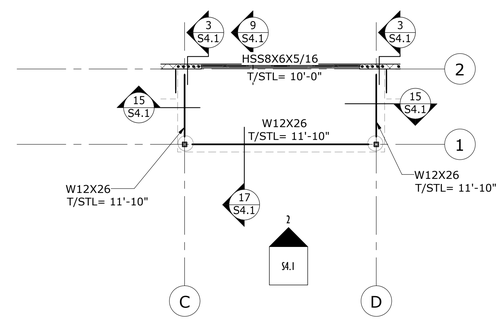

NOTES:
1. SEE ARCHITECTURAL DRAWINGS FOR LOCATION OF BEARING WALLS AND DIMENSIONS NOT SHOWN.

5 LOW ENTRY FRAMING PLAN
SCALE: 1/8" = 1'-0"

OXFORD ARCHITECTURE
2934 Sidco Drive
Suite 120
Nashville, TN 37204
Architecture
Planning
Interior Architecture

bennett&pless
formerly WiSEngineers
Experience Structural Expertise
Atlanta, Boca Raton, Charlotte, Chattanooga, Knoxville, Nashville, Orlando, Raleigh
1964 - 2024 Celebrating 60 Years of Structural Excellence
565 Marriott Drive, Suite 300
Nashville, Tennessee 37214
Tel 615 782 0100

Copyright 2024 • Bennett & Pless, Inc.
All Rights Reserved

B & P Job Number 24.02.117

TSC

TRACTOR SUPPLY COMPANY

BOUTTE LOUISIANA

This drawing and the design shown is the property of the architect. The reproduction, copying or use of this drawing without their written consent is prohibited and any infringement will be subject to legal action

Job Number: ??

Date: 07.18.2024

Revisions:

Revisions:

Revisions:

ROOF FRAMING PLAN, CONT.

Sheet Number: S2.1

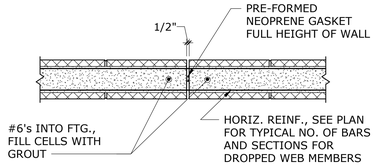

NOTES:
1. SEE ARCH. FOR EXACT LOCATION OF CONTROL JOINTS.
2. DO NOT LOCATE CONTROL JOINTS WITHIN 2'-0" OF OPENINGS OR EXTERIOR CORNERS.
3. HORIZ. REINFORCING STEEL IN BOND BEAMS SHALL BE CONTINUOUS ACROSS JOINTS.
4. VERT. REINFORCEMENT SHALL EXTEND INTO FTG.

16 CONTROL JOINT DETAIL REINFORCED MASONRY - JOIST BEARING COURSES
SCALE: NONE

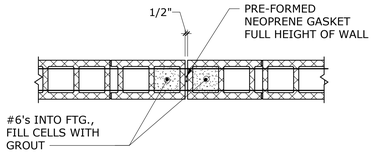

NOTES:
1. SEE ARCH. FOR EXACT LOCATION OF CONTROL JOINTS.
2. DO NOT LOCATE CONTROL JOINTS WITHIN 2'-0" OF OPENINGS OR EXTERIOR CORNERS.
3. HORIZONTAL JOINT REINFORCEMENT TO BE DISCONTINUOUS AT JOINT.
4. VERT. REINFORCEMENT SHALL EXTEND INTO FTG.

12 CONTROL JOINT DETAIL REINFORCED MASONRY - TYP. NON JOIST BRG/. COURSES
SCALE: NONE

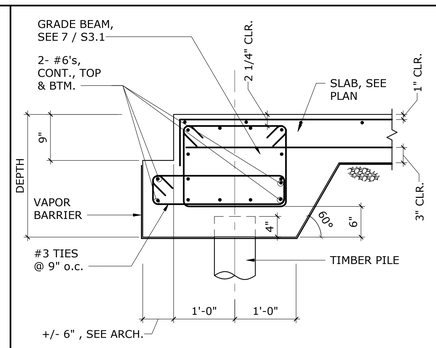

8 SECTION @ GRADE BEAM @ EXT. WALL
SCALE: 1" = 1'-0"

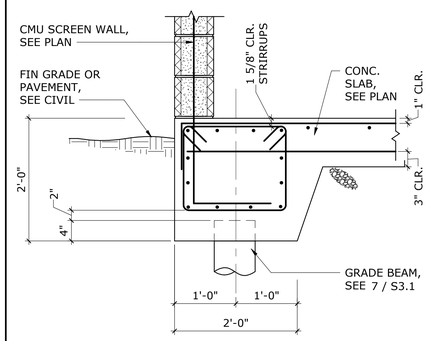

4 SECTION @ EXT. WALL
SCALE: 1" = 1'-0"

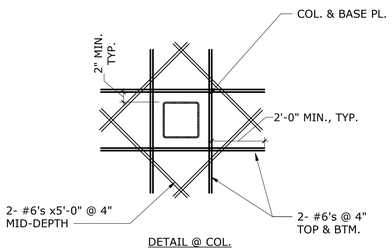

DETAIL @ COL.

* PROVIDE STANDARD AC1 180 DEG HOOK WHERE MIN. BAR EXTENSION PAST EDGE OF OPENING IS NOT POSSIBLE.

NOTE:
1. BOND BEAM REINF. @ TOP OF WALL NOT SHOWN

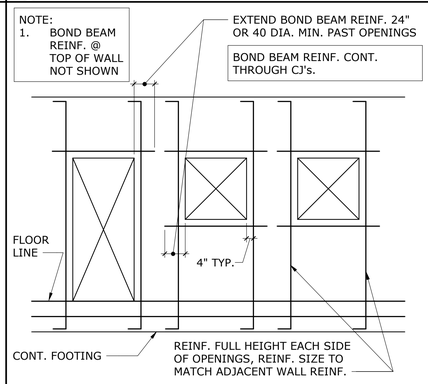

11 TYP. CMU WALL REINFORCING
SCALE: NONE

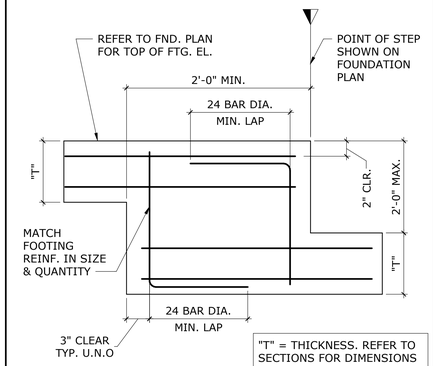

"T" = THICKNESS. REFER TO SECTIONS FOR DIMENSIONS

3 TYP. STEPPED FOOTING
SCALE: NONE

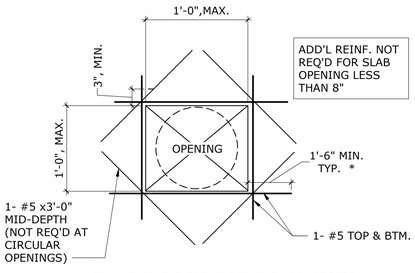

DETAIL @ SINGLE OPENING/TRENCH DR. RECESS

NOTE:
NOTIFY ENGINEER OF RECORD IN WRITING OF OPENINGS NOT SHOWN ON PLANS OR OF CONDITIONS NOT COVERED BY THESE DETAILS.

18 DETAIL @ SLAB OPENING & COL.
SCALE: NONE

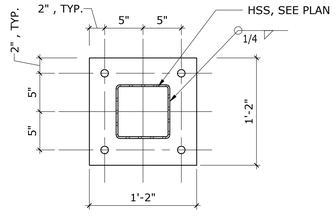

BASE PLATE = 1" x1'-2" x1'-2"
A.B. = 4- 1" DIA. x 12" EMBED

NOTE:
1. POST INSTALLED ANCHOR BOLTS ARE NOT PERMITTED.
2. SEE GENERAL NOTES FOR A.B. COMPOSITION.

6 BASE PLATE DETAILS
SCALE: 1 1/2" = 1'-0"

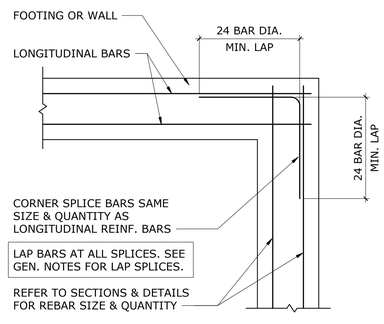

2 TYP. CONTINUITY CORNER
SCALE: NONE

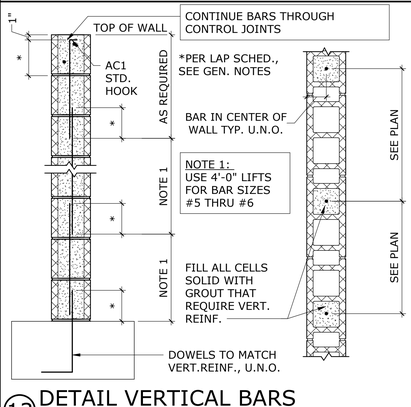

13 DETAIL VERTICAL BARS
SCALE: NONE

NOTE:
1. MAXIMUM JOINT SPACING SHALL BE 12 FT. IN EACH DIRECTION UNLESS SHOWN OTHERWISE ON PLAN.

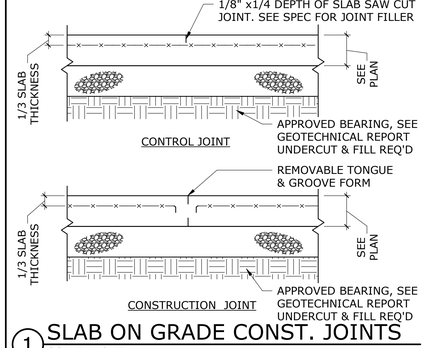

1 SLAB ON GRADE CONST. JOINTS
SCALE: NONE

OXFORD ARCHITECTURE
2934 Sidco Drive
Suite 120
Nashville, TN 37204
Architecture
Planning
Interior Architecture

bennett&pless
formerly WiSEngineers
Experience Structural Expertise
Atlanta, Boca Raton, Charlotte, Chattanooga, Knoxville, Nashville, Orlando, Raleigh
1964 - 2024 Celebrating 60 Years of Structural Excellence
565 Marriott Drive, Suite 300
Nashville, Tennessee 37214
Tel 615 782 0100

Copyright 2024 • Bennett & Pless, Inc.
All Rights Reserved

B & P Job Number 24.02.117

TSC
TRACTOR SUPPLY COMPANY
BOUTTE LOUISIANA

This drawing and the design shown is the property of the architect. The reproduction, copying or use of this drawing without their written consent is prohibited and any infringement will be subject to legal action

Job Number: ??
Date: 07.18.2024
Revisions:
Revisions:
Revisions:
DETAILS
Sheet Number: S3.0

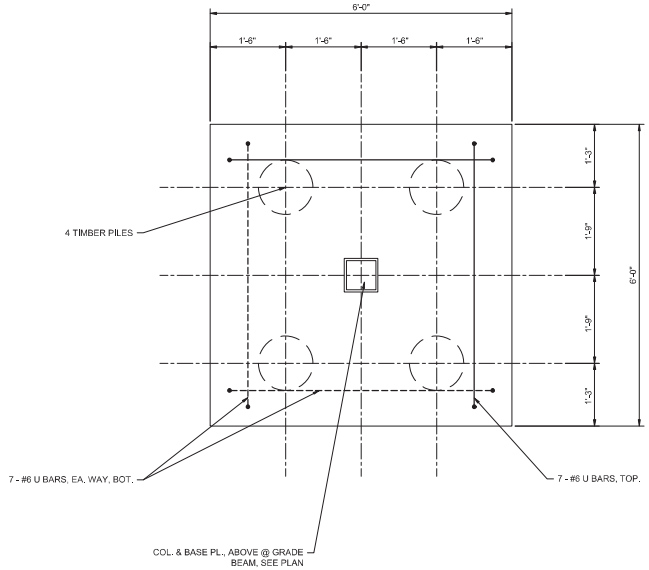

1 PILE CAP PC-4 - 30" THICK
TYP. TYP. SCALE: 1" = 1'-0"

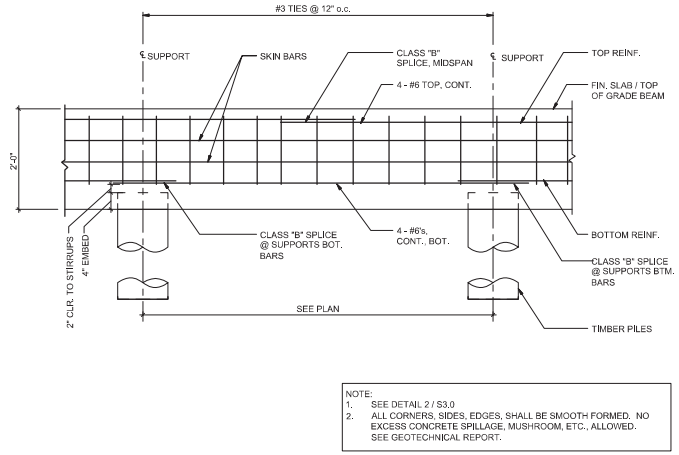

NOTE:
1. SEE DETAIL 2 / S3.0
2. ALL CORNERS, SIDES, EDGES, SHALL BE SMOOTH FORMED. NO EXCESS CONCRETE SPILLAGE, MUSHROOM, ETC., ALLOWED. SEE GEOTECHNICAL REPORT.

2 TYPICAL EXTERIOR GRADE BEAM REINFORCEMENT DIAGRAM
TYP. TYP. SCALE:1" = 1'-0"

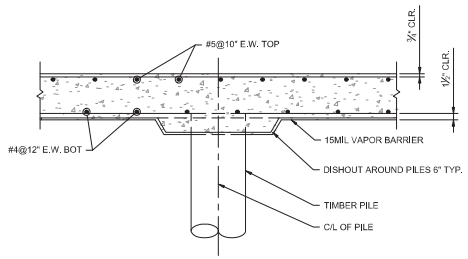

3 SECTION
S1.0 S3.1 SCALE: 1" = 1'-0"

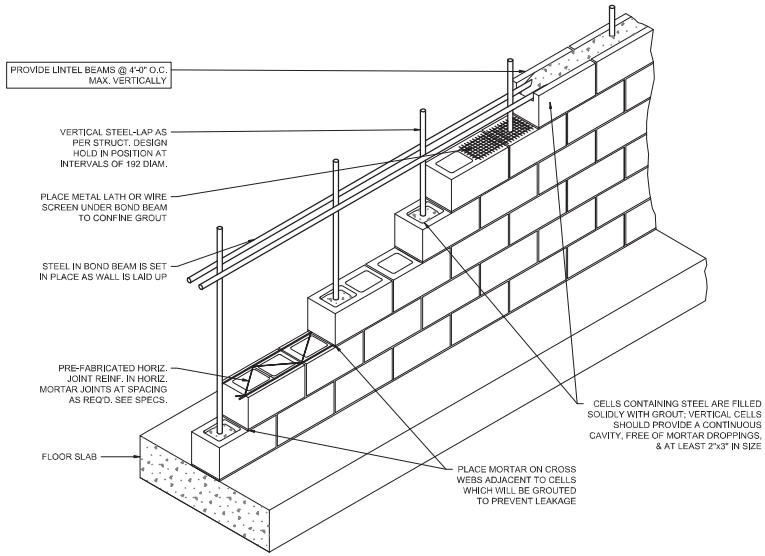

4 TYP. REINF. CONC. MASONRY CONSTRUCTION
TYP. TYP. SCALE: 1" = 1'-0"

BRETT GREENE ARCHITECT
2934 Sidco Drive
Suite 120
Nashville, TN 37204
Architecture
Planning
Interior Architecture

TRACTOR SUPPLY COMPANY
HOUMA
LOUISIANA

STATE OF LOUISIANA
DANIEL A. FLORES GUEVARA
License No. 0038154
Feb 28, 2025
PROFESSIONAL ENGINEER

This drawing and the design shown is the property of the architect. The reproduction, copying or use of this drawing without their written consent is prohibited and any infringement will be subject to legal action.

Job Number: 2485
Date: 01.20.2025
Revisions:
Revisions:
Revisions:

STRUCTURAL DETAILS

Sheet Number: S3.1

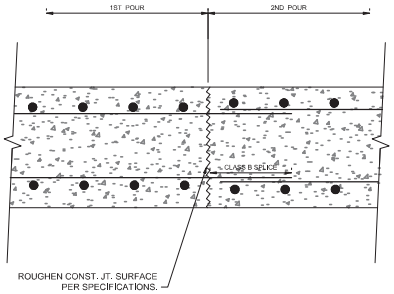

1 TYP. TYP. CONSTRUCTION JOINT (CJ) (VERTICAL PLANE)
1/2" = 1'-0"

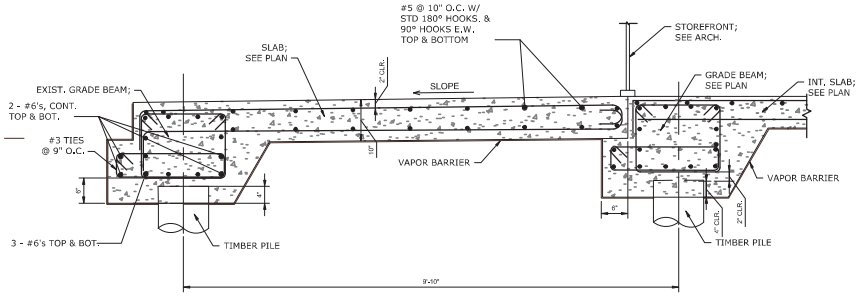

2 S1.0 S3.2 SECTION @ STOREFRONT
SCALE: 1" = 1'-0"

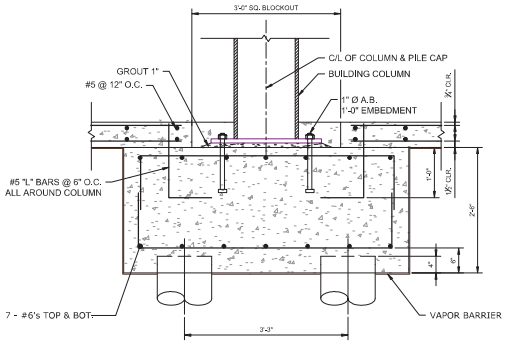

3 S1.0 S3.2 SECTION @ INTERIOR COLUMN
SCALE: 1" = 1'-0"

BRETT GREENE
ARCHITECT

2934 Sidco Drive
Suite 120
Nashville, TN 37204

Architecture
Planning
Interior Architecture

TRACTOR SUPPLY COMPANY

HOUMA
LOUISIANA

This drawing and the design shown is the property of the architect. The reproduction, copying or use of this drawing without their written consent is prohibited and any infringement will be subject to legal action.

Job Number: 2485

Date: 01.20.2025

Revisions:

Revisions:

Revisions:

STRUCTURAL DETAILS

Sheet Number: S3.2

STATE OF LOUISIANA
DANIEL A. FLORES GUEVARA
License No. 0018154
Feb 28, 2025
PROFESSIONAL ENGINEER

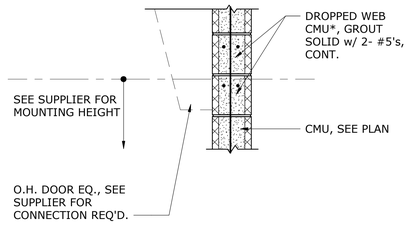

20 SECTION @ O.H. DOOR PAD
SCALE: 1" = 1'-0"

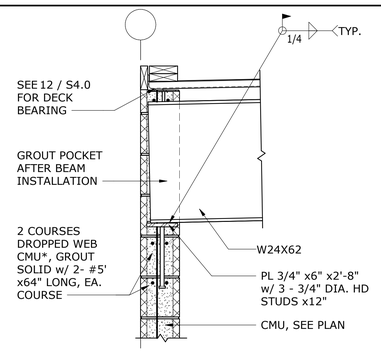

16 SECTION @ BEAM BRG. - REAR WALL
SCALE: 1" = 1'-0"

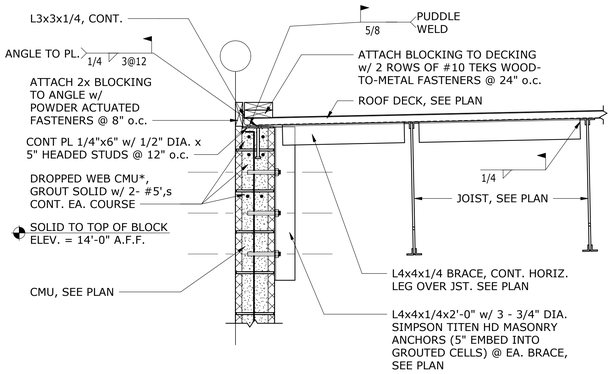

12 SECTION @ DECK BRG. - REAR
SCALE: 1" = 1'-0"

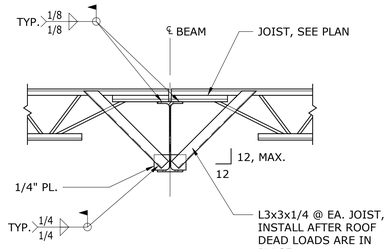

4 TYP. BEAM BOTTOM FLANGE BRACING
SCALE: NONE

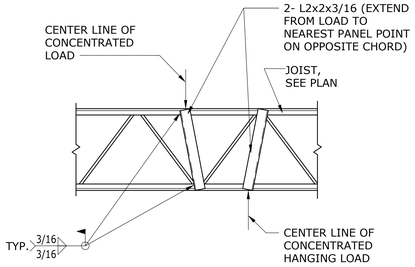

NOTE:
1. AT ALL CONCENTRATED LOADS NOT OCCURRING AT PANEL PTS.

19 JOIST REINF. @ NON-PANEL POINTS
SCALE: NONE

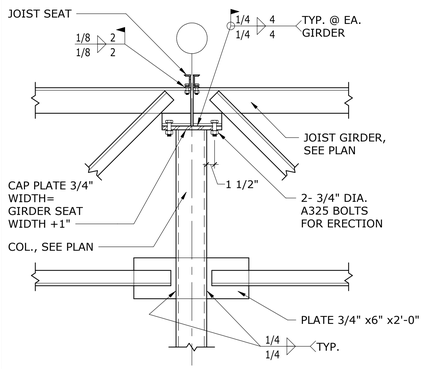

15 JOIST GIRDER @ COLUMN
SCALE: 1" = 1'-0"

NOTE:
1. SEE 9 / S4.0 FOR PARAPET & DECK CONNECTION INFO NOT SHOWN.

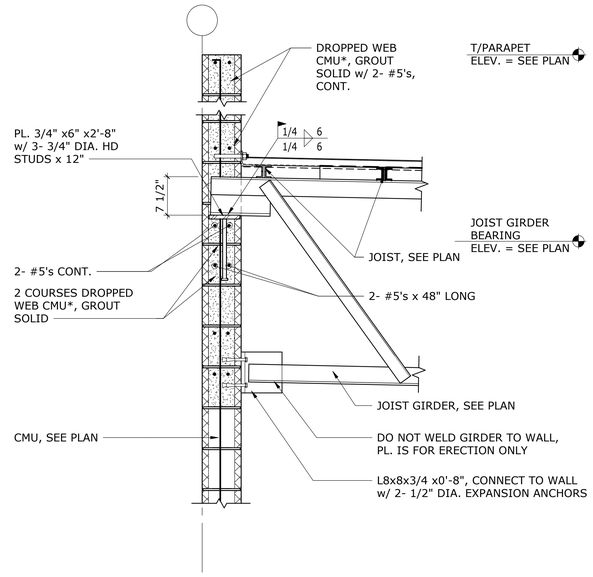

10 JOIST GIRDER BRG. ON CMU
SCALE: 1" = 1'-0"

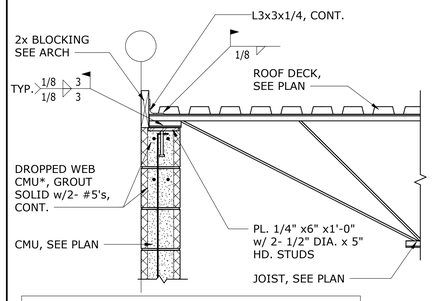

NOTE:
1. REFER TO ARCH. DWGS. FOR EXACT EAVE CONDITIONS & BLOCKING REQUIREMENTS.

3 SECTION @ DECK BRG. - SIDE WALL
SCALE: 1" = 1'-0"

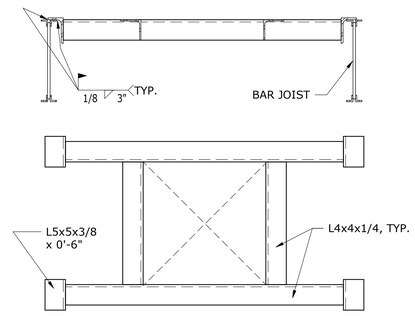

NOTE:
1. COORDINATE w/ ARCH. & MECH. FOR OPENING SIZE.

18 TYPICAL ROOF OPENING FRAME
SCALE: NONE

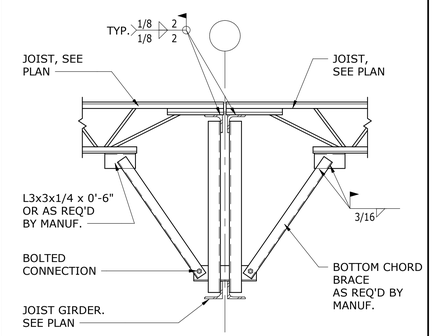

14 JOIST @ JOIST GIRDER
SCALE: NONE

NOTE:
1. CONCENTRATED LOADS SHALL NOT BE PERMITTED @ DECK

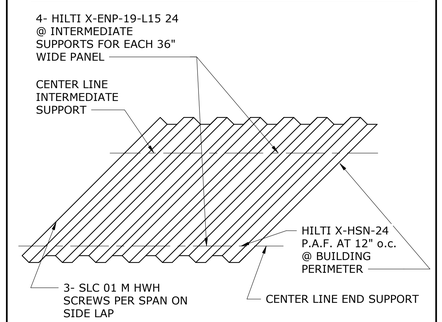

2 ROOF DECK ATTACHMENT - ALT.
SCALE: NONE

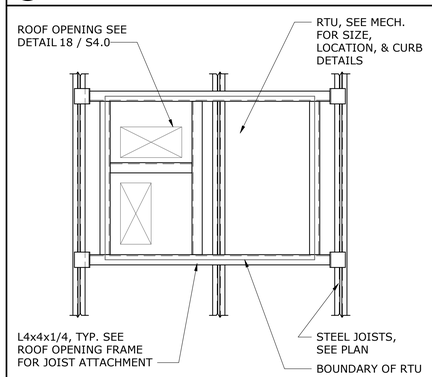

17 RTU SUPPORT FRAME
SCALE: NONE

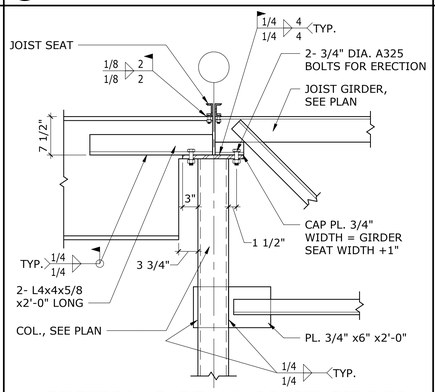

13 SECTION @ BEAM/ JOIST GIRDER
SCALE: 1" = 1'-0"

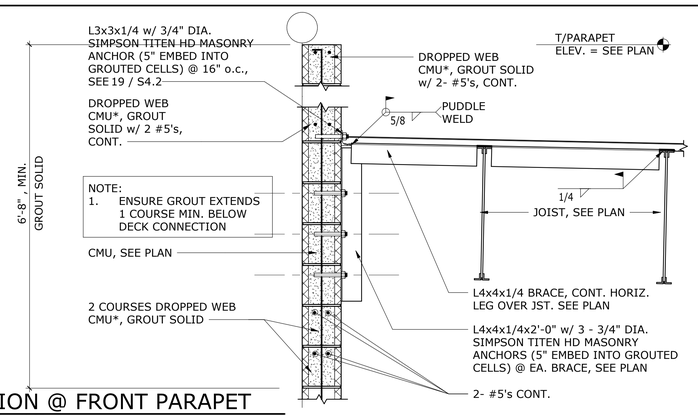

9 SECTION @ FRONT PARAPET
SCALE: 1" = 1'-0"

NOTE:
1. WELDING WASHERS MUST BE USED WITH DECK THINNER THAN 22 GA.
2. CONCENTRATED LOADS SHALL NOT BE PERMITTED @ DECK
3. SEE 2 / S4.0 FOR ALT. ATTACHMENT.

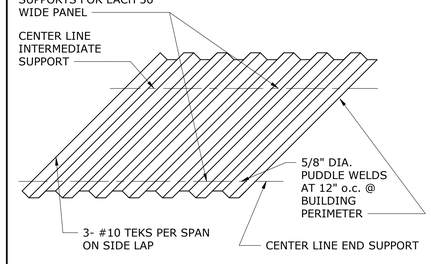

1 ROOF DECK ATTACHMENT
SCALE: NONE

OXFORD ARCHITECTURE

2934 Sidco Drive
Suite 120
Nashville, TN 37204

Architecture
Planning
Interior Architecture

bennett&pless
formerly WiSEngineers
Experience Structural Expertise
Atlanta, Boca Raton, Charlotte, Chattanooga, Knoxville, Nashville, Orlando, Raleigh
1964 - 2024 Celebrating 60 Years of Structural Excellence
565 Marriott Drive, Suite 300
Nashville, Tennessee 37214
Tel 615 782 0100

Copyright 2024 • Bennett & Pless, Inc.
All Rights Reserved

B & P Job Number 24.02.117

TSC

TRACTOR SUPPLY COMPANY

BOUTTE LOUISIANA

This drawing and the design shown is the property of the architect. The reproduction, copying or use of this drawing without their written consent is prohibited and any infringement will be subject to legal action

Job Number: ??

Date: 07.18.2024

Revisions:

Revisions:

Revisions:

DETAILS

Sheet Number: S4.0

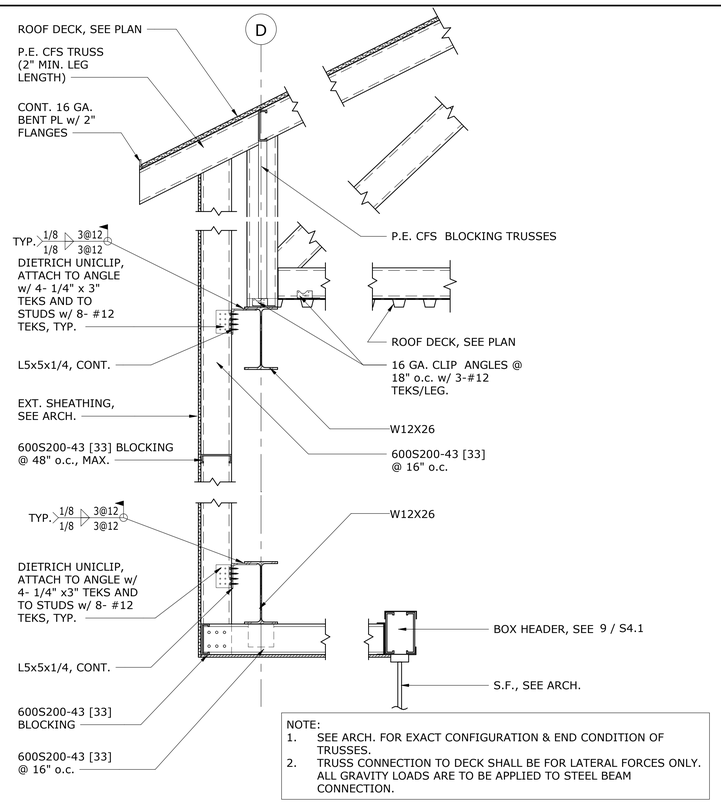

NOTE:
1. SEE ARCH. FOR EXACT CONFIGURATION & END CONDITION OF TRUSSES.
2. TRUSS CONNECTION TO DECK SHALL BE FOR LATERAL FORCES ONLY. ALL GRAVITY LOADS ARE TO BE APPLIED TO STEEL BEAM CONNECTION.

15 SECTION @ FRONT ENTRY
SCALE: 1" = 1'-0"

NOTE:
1. ALL TUBE CONNECTIONS TO BE 1/8" FILLET WELDS, MIN.
2. REFER TO ARCH DWGS FOR CANOPY DIMENSIONS AND LOCATIONS.
3. GROUT HATCH REPRESENTS CONT. GROUTING, HORIZ. ALL CORES @ VERT. REINF. SHALL BE GROUTED SOLID.

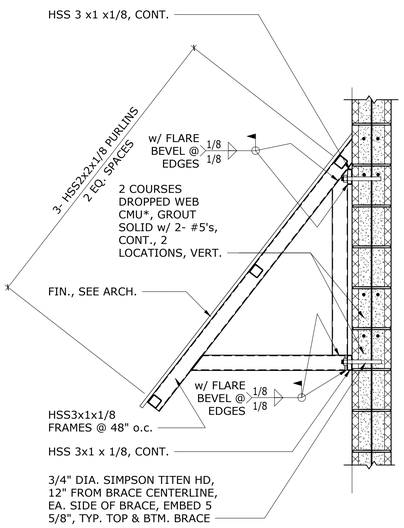

7 SECTION @ AWNING FRAME
SCALE: 1" = 1'-0"

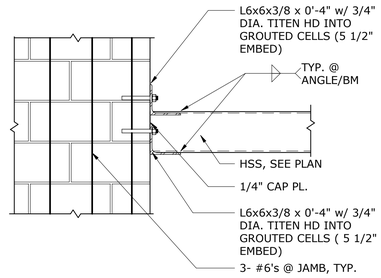

4 SECTION @ ENTRY HIGH
SCALE: 1" = 1'-0"

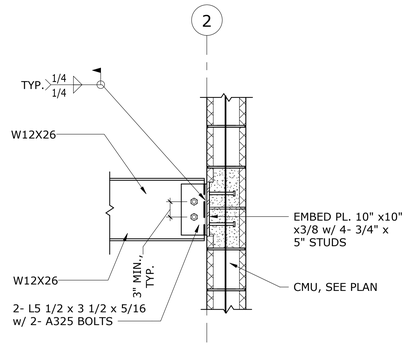

3 SECTION @ BEAM BRG.
SCALE: 1" = 1'-0"

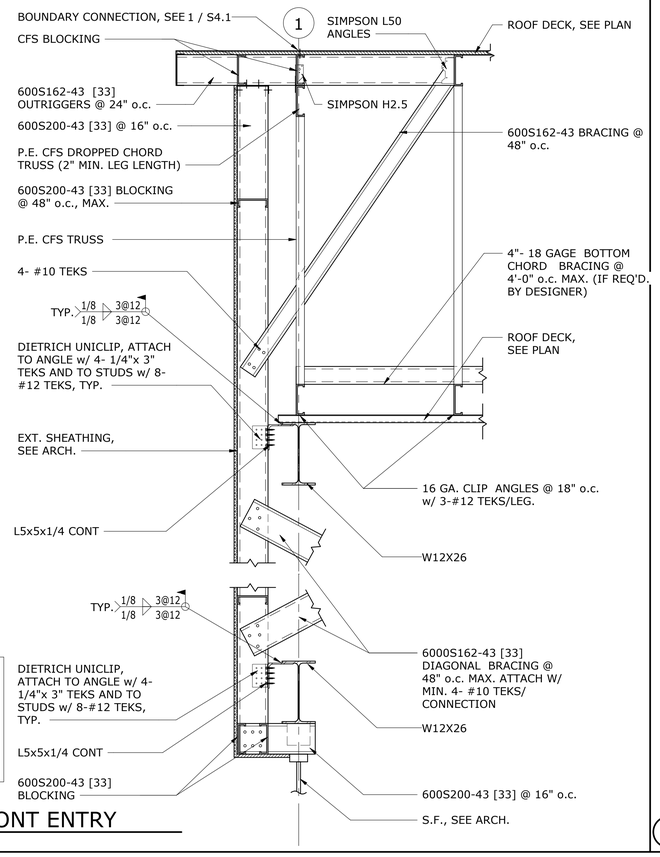

NOTE:
1. SEE ARCH. FOR EXACT CONFIGURATION AND END CONDITION OF TRUSSES.
2. BLOCKING TRUSSES NOT SHOWN FOR CLARITY.

17 SECTION @ FRONT ENTRY
SCALE: 1" = 1'-0"

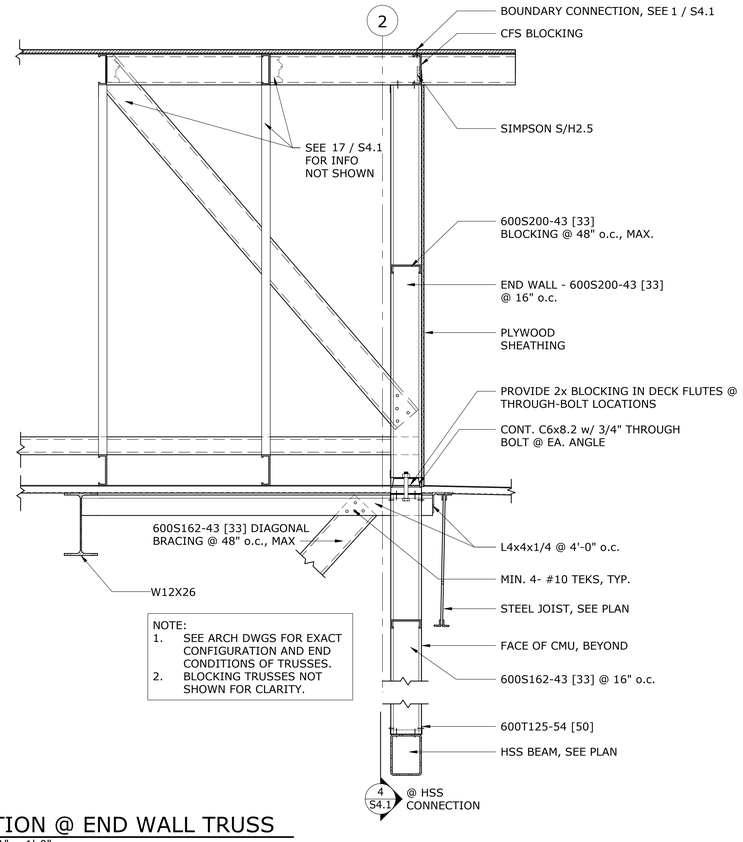

NOTE:
1. SEE ARCH DWGS FOR EXACT CONFIGURATION AND END CONDITIONS OF TRUSSES.
2. BLOCKING TRUSSES NOT SHOWN FOR CLARITY.

9 SECTION @ END WALL TRUSS
SCALE: 1" = 1'-0"

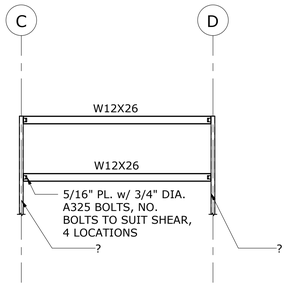

2 ELEVATION @ ENTRY BEAMS
SCALE: 1/8" = 1'-0"

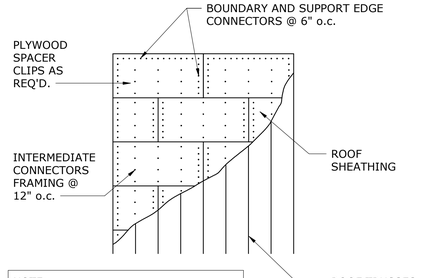

NOTE:
1. PROVIDE 1/8" GAP AT ALL PANEL JOINTS
2. ALL CONNECTORS TO BE TEKS 12-24 PFH SCREWS, SPACED AS NOTED.

1 ROOF SHEATHING ATTACHMENT
SCALE: NONE

OXFORD ARCHITECTURE
2934 Sidco Drive
Suite 120
Nashville, TN 37204
Architecture
Planning
Interior Architecture

bennett&pless
formerly WiSEngineers
Experience Structural Expertise
Atlanta, Boca Raton, Charlotte, Chattanooga, Knoxville, Nashville, Orlando, Raleigh
1964 - 2024 Celebrating 60 Years of Structural Excellence
565 Marriott Drive, Suite 300
Nashville, Tennessee 37214
Tel 615 782 0100

Copyright 2024 • Bennett & Pless, Inc.
All Rights Reserved

B & P Job Number 24.02.117

TRACTOR SUPPLY COMPANY
BOUTTE
LOUISIANA

This drawing and the design shown is the property of the architect. The reproduction, copying or use of this drawing without their written consent is prohibited and any infringement will be subject to legal action

Job Number: ??
Date: 07.18.2024
Revisions:
Revisions:
Revisions:
DETAILS
Sheet Number: S4.1

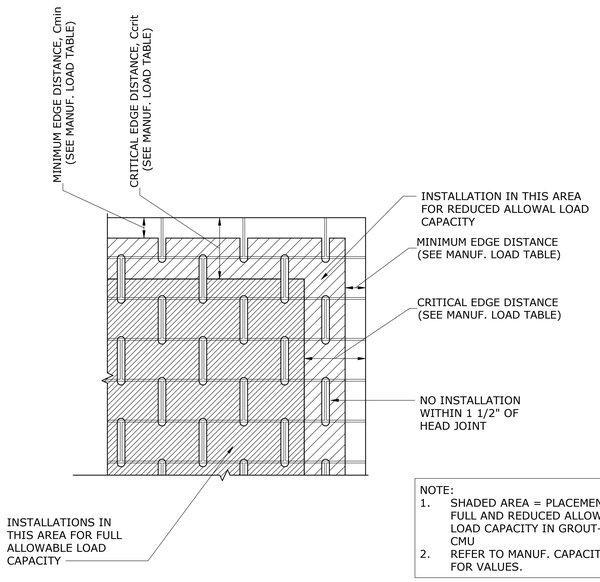

NOTE:
1. SHADED AREA = PLACEMENT FOR FULL AND REDUCED ALLOWABLE LOAD CAPACITY IN GROUT-FILLED CMU
2. REFER TO MANUF. CAPACITY TABLES FOR VALUES.

19 SIMPSON TITEN HD ANCHOR PARAMETERS
SCALE: NONE

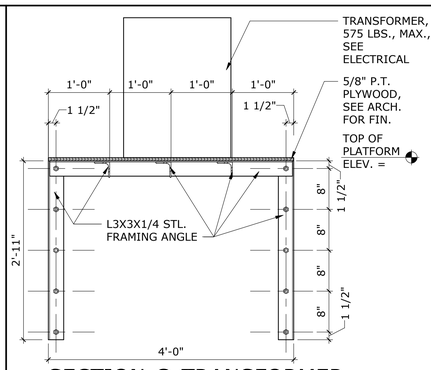

12 SECTION @ TRANSFORMER PLATFORM
SCALE: 1" = 1'-0"

NOTE:
1. G.C. TO COORDINATE PENETRATION LOCATIONS & ELEVATIONS w/SPECIFIC DISCIPLINES REQUIREMENTS.

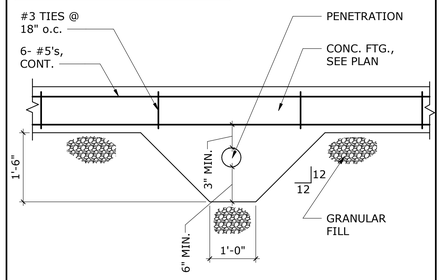

8 SECTION @ DROPPED FTG.
SCALE: NONE

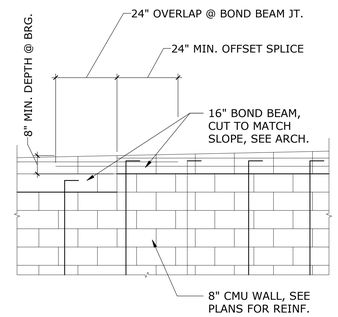

4 SECTION @ SLOPED BOND BEAM
SCALE: NONE

NOTE:
1. G.C. TO COORDINATE PENETRATION LOCATIONS & ELEVATIONS w/SPECIFIC DISCIPLINES REQUIREMENTS.

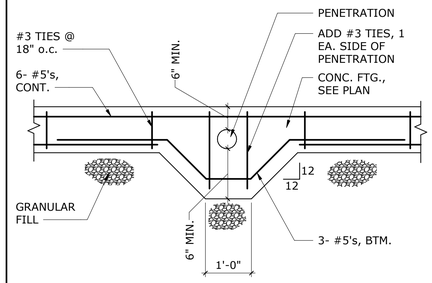

7 SECTION @ DROPPED FTG.
SCALE: NONE

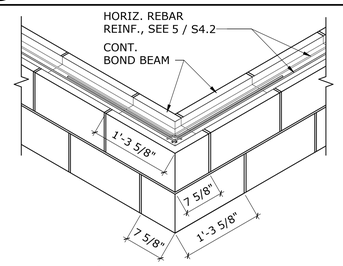

8" WALL USING STANDARD UNITS

NOTE:
1. SEE 2 / S3.0 FOR BOND BEAM REINF. PARAMETERS.
2. LADDER-TYPE JT. REINF. NOT SHOWN FOR CLARITY.
3. SEE PLANS FOR VERT. REINF.
4. CONTROL & EXPANSION JOINTS @ CORNER ARE PROHIBITED.

3 ISOMETRIC @ RUNNING BOND CORNER
SCALE: NONE

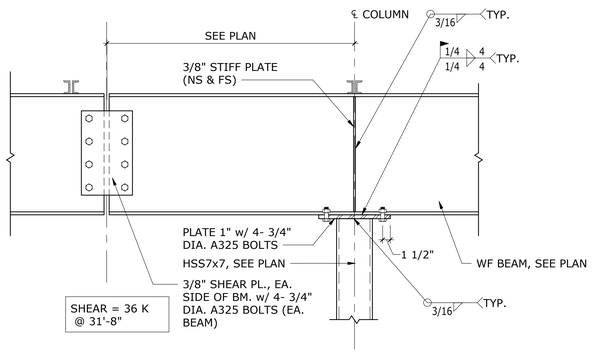

18 SECTION @ BEAM SPLICE
SCALE: 1" = 1'-0"

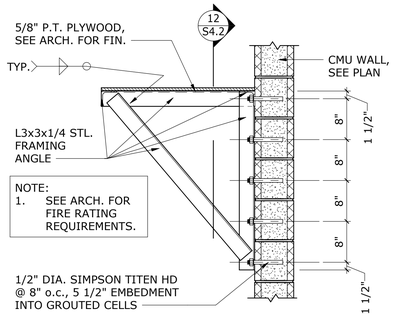

NOTE:
1. SEE ARCH. FOR FIRE RATING REQUIREMENTS.

10 SECTION @ TRANSFORMER PLATFORM
SCALE: 1" = 1'-0"

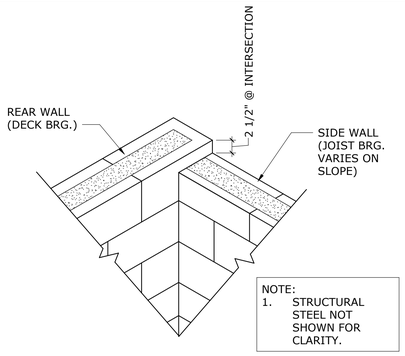

NOTE:
1. STRUCTURAL STEEL NOT SHOWN FOR CLARITY.

6 ISOMETRIC @ CMU TRANSITION - REAR WALL
SCALE: NONE

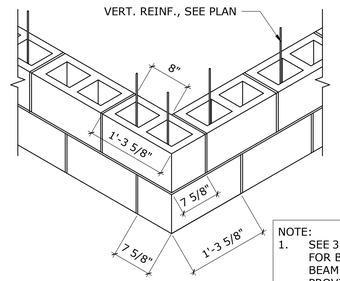

8" WALL USING STANDARD UNITS

NOTE:
1. SEE 3 / S4.2 FOR BOND BEAM PROVISIONS @ RUNNING BOND CORNERS.

2 ISOMETRIC @ RUNNING BOND MASONRY
SCALE: NONE

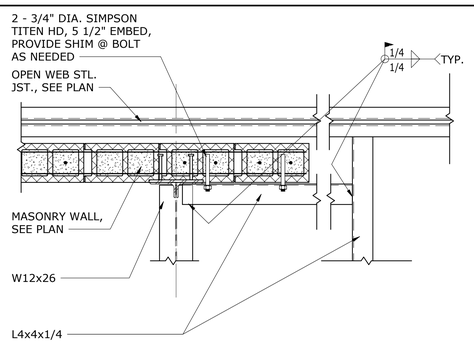

17 PLAN VIEW - VEST DECK CONNECTION
SCALE: 1" = 1'-0"

NOTE:
1. G.C. TO COORDINATE PENETRATION LOCATIONS & ELEVATIONS w/ SPECIFIC DISCIPLINES REQUIREMENTS.

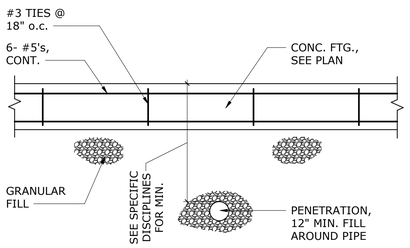

9 SECTION @ FTG. / PENETRATION
SCALE: NONE

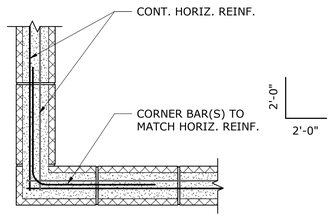

5 BOND BEAM REINF. @ CORNER
SCALE: NONE

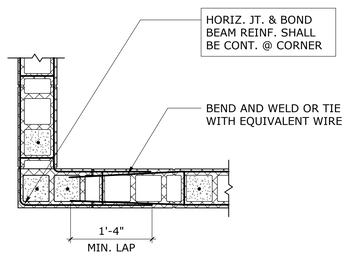

1 CMU REINF. @ CORNER
SCALE: NONE

OXFORD ARCHITECTURE
2934 Sidco Drive
Suite 120
Nashville, TN 37204
Architecture
Planning
Interior Architecture

bennett&pless
formerly WiSEngineers
Experience Structural Expertise
Atlanta, Boca Raton, Charlotte, Chattanooga, Knoxville, Nashville, Orlando, Raleigh
1964 - 2024 Celebrating 60 Years of Structural Excellence
565 Marriott Drive, Suite 300
Nashville, Tennessee 37214
Tel 615 782 0100

Copyright 2024 • Bennett & Pless, Inc.
All Rights Reserved

B & P Job Number 24.02.117

TSC

TRACTOR SUPPLY COMPANY
BOUTTE
LOUISIANA

This drawing and the design shown is the property of the architect. The reproduction, copying or use of this drawing without their written consent is prohibited and any infringement will be subject to legal action

Job Number: ??
Date: 07.18.2024
Revisions:
Revisions:
Revisions:

DETAILS

Sheet Number: S4.2

STRUCTURAL GENERAL NOTES

DESIGN AND CODE INFORMATION

1. ALL CONSTRUCTION SHALL CONFORM TO THE LOUISIANA STATE UNIFORM CONSTRUCTION CODE (BASED ON THE INTERNATIONAL BUILDING CODE, 2021 EDITION). APPLICABLE LOADING CRITERIA IS BASED ON THE ASCE 7-16.

2. VERIFY EXISTING CONDITIONS AND ALL DIMENSIONS AND NOTIFY ARCHITECT OF ANY CONDITIONS WHICH CONFLICT WITH OTHER PLANS AND SPECIFICATIONS. STRUCTURAL DRAWINGS MUST BE COORDINATED WITH ARCHITECTURAL DRAWINGS. STRUCTURAL DRAWINGS ARE NOT INTENDED FOR BUILDING LAYOUT.

3. SHOP DRAWINGS WILL NOT BE REVIEWED BY THE DESIGNER UNTIL AFTER THE GENERAL CONTRACTOR HAS THOROUGHLY REVIEWED THE SHOP DRAWINGS, VERIFIED EXISTING CONDITIONS, AND COORDINATED THE SHOP DRAWINGS WITH OTHER AFFECTED TRADES. SUBMIT FOUR COPIES OF REVIEWED DRAWINGS FOR ENGINEER'S REVIEW. ONLY THREE SETS OF MARKED UP SHOP DRAWINGS SHALL BE RETURNED BY THE DESIGNER. REPRODUCTION OF STRUCTURAL DRAWINGS FOR SHOP DRAWINGS IS NOT PERMITTED.

4. THE STRUCTURE IS UNSTABLE UNTIL ALL LOAD BEARING WALLS ARE ERECTED AND STEEL MEMBERS ARE ERECTED, CONNECTIONS ARE COMPLETELY BOLTED AND/OR WELDED AND INSPECTED, THE STEEL DECK ATTACHED TO THE STEEL FRAMING, AND THE CONCRETE FLOORS PLACED AND ATTAINS 75% OF 28-DAY STRENGTH. UNTIL SUCH TIME, TEMPORARY BRACING IS REQUIRED. THE DESIGN ADEQUACY OF TEMPORARY BRACING AND SHORING IS THE SOLE RESPONSIBILITY OF THE CONTRACTOR.

5. DO NOT SCALE STRUCTURAL DRAWINGS, AND FOR LOCATION OF MISCELLANEOUS ITEMS (OPENINGS, BENT PLATES, INSERTS, ETC.) AFFECTING STRUCTURAL WORK, SEE ARCHITECTURAL, MECHANICAL, PLUMBING AND ELECTRICAL DRAWINGS.

6. RISK CATEGORY: II

7. LIVE LOADS:
   - A. FLOORS: 100 PSF
   - B. STOCKROOM FLOOR: 150 PSF
   - C. ROOFS: 20 PSF

8. ROOF LOADS:
   - A. GROUND SNOW LOAD: 0 PSF
   - B. SNOW EXPOSURE Ce: 1.0
   - C. SNOW IMPORTANCE I: 1.0
   - D. THERMAL FACTOR: 1.0
   - E. FLAT ROOF SNOW LOAD: 0 PSF (NON-REDUCIBLE)

9. WIND LOADS:
   - A. BASIC WIND SPEED: 142 MPH (3-SEC GUST)
   - B. IMPORTANCE FACTOR: I=1.0
   - C. OCCUPANCY CATEGORY: II
   - D. EXPOSURE CATEGORY: C
   - E. BASE SHEAR:
     - a. MAIN BUILDING: Vx = 130.8 K
       VY = 134.9 K

COMPONENTS & CLADDING (WALLS)				
AREA	GCp +/- GCpi			
	10 SF	100 SF	200 SF	500 SF
NEGATIVE ZONE 4	-1.17	-1.01	-0.96	-0.90
NEGATIVE ZONE 5	-1.44	-1.12	-1.03	-0.90
POSITIVE ZONE 4 & 5	1.08	0.92	0.87	0.81

AREA	SURFACE PRESSURE (PSF)			
	10 SF	100 SF	200 SF	500 SF
NEGATIVE ZONE 4	-46.1	-39.8	-38	-35.5
NEGATIVE ZONE 5	-56.7	-44.2	-40.4	-35.5
POSITIVE ZONE 4 & 5	42.6	36.3	34.4	31.9

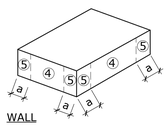

WALL

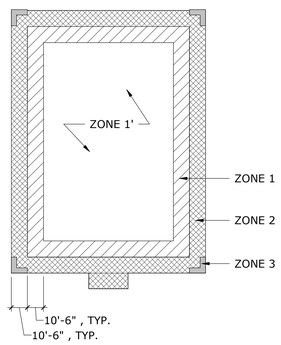

COMPONENTS & CLADDING (ROOF)	
AREA	SURFACE PRESSURE (PSF)
	100 SF
NEGATIVE ZONE 1	-56.7
NEGATIVE ZONE 1'	-41.7
NEGATIVE ZONE 2	-75.3
NEGATIVE ZONE 3	-89.5
POSITIVE ALL ZONES	16.00

ROOF - NET - WIND UPLIFT PRESSURES

BASIC WIND SPEED: 142 MPH (3-SECOND GUST)
EXPOSURE CATEGORY: C, Aeff > 100 SF
FOR DL OF ROOF, USE 10 PSF
"W" IS PROVIDED PER ASCE 7-16

DESIGN AND CODE INFORMATION, CONT.

10. SEISMIC DESIGN LOADS:
    - A. IMPORTANCE FACTOR: I = 1.0
    - B. RISK CATEGORY: II
    - C. MAPPED SPECTRAL RESPONSE ACCELERATIONS:
      - a. Ss = 0.086
      - b. S1 = 0.052
    - D. SITE CLASS: E
    - E. DESIGN SPECTRAL RESPONSE ACCELERATIONS:
      - a. SDs = 0.138
      - b. SD1 = 0.146
    - F. DESIGN CATEGORY: C
    - G. BASIC SEISMIC FORCE RESISTING SYSTEM: MAIN BUILDING:
      - a. INTERMEDIATE REINFORCED MASONRY SHEAR WALLS
    - H. DESIGN BASE SHEAR: 9.8 K
    - I. RESPONSE MODIFICATION FACTOR: R = 3.5
    - J. REDUNDANCY FACTOR: P = 1.0
    - K. RESPONSE COEFFICIENT Cs: 0.042

11. FLOOD LOADS (Fa):
    - A. THE STRUCTURE IS NOT LOCATED IN A FLOOD ZONE AS SHOWN ON FEMA FLOOD INSURANCE RATE MAP (FIRM) COMMUNITY PANEL NO. 34015C0089E, DATED JANUARY 20, 2010.

12. THE ROOF FRAMING SYSTEM HAS BEEN DESIGNED WITH THE UNDERSTANDING THAT THE DRAINAGE SYSTEM IS ADEQUATE TO PREVENT PONDING.

SPECIAL INSPECTIONS AND TESTING

1. THE OWNER SHALL EMPLOY AN INDEPENDENT TESTING COMPANY TO PERFORM THE ON SITE INSPECTIONS AND TESTING AS INDICATED ON SHEETS S5.2 & S5.3.

STRUCTURAL OBSERVATIONS

1. THE CONTRACTOR/OWNER SHALL EMPLOY A LICENSED STRUCTURAL ENGINEER OR ARCHITECT TO PERFORM PERIODIC VISUAL OBSERVATIONS OF THE STRUCTURE DURING CONSTRUCTION FOR GENERAL CONFORMANCE TO THE DESIGN DRAWINGS.

FOUNDATION NOTES

1. FOUNDATION DESIGN IS BASED ON THE REPORT MADE BY ECS SOUTHEAST, LLC, DATED MAY 3, 2024 (PROJECT NO. 65:1565). THE FLOOR SLAB IS COMPRISED OF A STRUCTURAL FLOOR SUPPORTED WITH GRADE BEAMS

2. COLUMNS, WALLS, GRADE BEAMS AND PEDESTALS HAVE BEEN DESIGNED TO BE SUPPORTED BY TIMBER PILES AND THEIR PILE CAPS IN ACCORDANCE WITH THE GEOTECHNICAL REPORT RECOMMENDATIONS.

3. PILES ARE TO BE 7 INCH TIP - 12 INCH BUTT TIMBERS MEETING ASTM D25, CLASS B AND DRIVEN TO DEPTHS REQUIRED TO DEVELOP THE REQUIRED LOAD. PILES SHALL BE PRESSURE TREATED AS RECOMMENDED IN THE GEOTECHNICAL REPORT.

4. THE ALLOWABLE DESIGN PILE CAPACITY IS AS SHOWN BELOW.

5. WHERE FOOTING EXCAVATIONS ARE TO REMAIN OPEN AND MAY BE EXPOSED TO RAINFALL, THE EXCAVATIONS SHALL BE UNDERCUT AND A 3 INCH THICK MUD MAT OF 2000 PSI CONCRETE SHALL BE PLACED IN THE BOTTOM TO PROTECT THE BEARING SOILS.

ROUND TIMBER PILES

1. THE ROUND TIMBER PILES SHALL BE DESIGNED AND INSTALLED PER CHAPTER 18 OF THE 2021 INTERNATIONAL BUILDING CODE, AND THE RECOMMENDATIONS PROVIDED IN THE PROJECT GEOTECHNICAL REPORT . DESIGN THE ROUND TIMBER PILES FOR ALL PROVIDED LOADS, INCLUDING AXIAL COMPRESSIONS, AND AXIAL TENSIONS.

ULTIMATE SINGLE PILE AXIAL CAPACITIES			
TIMBER PILE TYPE	EMBEDMENT DEPTH (FEET)	ULTIMATE COMPRESSION CAPACITY (KIPS)	ULTIMATE TENSION CAPACITY (KIPS)
ASTM D25 CLASS B (12" BUTT / 7" TIP)	45	28	24
A FACTOR OF SAFETY OF 2.0 AND 3.0 MUST BE APPLIED TO THE PROVIDED AXIAL CAPACITIES FOR COMPRESSION AND TENSION, RESPECTIVELY.			

2. PROVIDE AS-BUILT DRAWING OF ROUND TIMBER PILES PILE LOCATIONS DIMENSIONED FROM COLUMN GRIDS FOR REVIEW. PILE CAP DESIGN IS BASED ON ROUND TIMBER PILES PILE TOLERANCE OF 3" IN ANY PLAN DIRECTION. OUT OF TOLERANCE ROUND TIMBER PILES MAY REQUIRE PILE CAP MODIFICATIONS AND/OR ADDITIONAL ROUND TIMBER PILES AT THE CONTRACTOR'S EXPENSE.

3. THE NUMBER OF ROUND TIMBER PILES SHOWN AT EACH COLUMN ARE THE MINIMUM AMOUNT REQUIRED. IF ROUND TIMBER PILES PILE ENGINEER REQUIRES MORE PILES, NOTIFY ARCHITECT PRIOR TO POURING PILE CAP. PILE CAP MAY REQUIRE MODIFICATIONS AND REDESIGN. COST OF PILE CAP REDESIGN SHALL BE INCLUDED IN ROUND TIMBER PILES PILE BID.

4. SEE GEOTECHNICAL REPORT FOR ROUND TIMBER PILES VERIFICATION, VIBRATION MONITORING AND PROOF LOAD TESTING.

5. UNLESS OTHERWISE DIRECTED, THE CONTRACTOR SHALL SELECT THE ROUND TIMBER PILES INSTALLATION METHOD, AND DETERMINE THE LENGTH AND DIAMETER AS NOTED

6. THE CONTRACTOR'S PROPOSAL FOR WORK SHALL EXPLAIN IN DETAIL THE MATERIALS, METHODS, AND DESIGN ASSUMPTIONS TO BE EMPLOYED. THE CONTRACTOR PERFORMING THE WORK DESCRIBED SHALL HAVE INSTALLED ROUND TIMBER PILES FOR A MINIMUM OF FIVE YEARS. AT THE TIME OF BID, THE CONTRACTOR SHALL SUBMIT A LIST CONTAINING AT LEAST FIVE PROJECTS ON WHICH THE CONTRACTOR HAS INSTALLED ROUND TIMBER PILES. A BRIEF DESCRIPTION OF EACH PROJECT AND A REFERENCE SHALL BE INCLUDED FOR EACH PROJECT LISTED. AS A MINIMUM, THE REFERENCE SHALL INCLUDE AN INDIVIDUAL'S NAME AND CURRENT PHONE NUMBER.

7. ALL PILE DRIVING OPERATIONS SHALL BE PERFORMED UNDER EXPERIENCED SUPERVISION AND WITH EFFICIENTLY OPERATING MECHANICAL EQUIPMENT. THE HAMMER SELECTION IS THE RESPONSIBILITY OF THE CONTRACTOR AND SHALL BE ADEQUATELY LARGE ENOUGH TO REACH PROPOSED TIP ELEVATIONS AND DEVELOP THE REQUIRED CAPACITIES BUT CONSIDERING THE POTENTIAL VIBRATIONS RESULTING FROM PILE DRIVING OPERATIONS.

8. THE CONTRACTOR SHALL ASSIGN AN ENGINEER TO SUPERVISE THE WORK, WITH AT LEAST THREE YEARS OF EXPERIENCE IN THE DESIGN AND CONSTRUCTION OF ROUND TIMBER PILES PILES. THE USE OF CONSULTANTS OR MANUFACTURERS' REPRESENTATIVES DOES NOT SATISFY THE REQUIREMENTS OF THIS SECTION. DRILL OPERATORS AND ON-SITE SUPERVISORS SHALL HAVE A MINIMUM OF ONE YEAR EXPERIENCE INSTALLING ROUND TIMBER PILES WITH THE CONTRACTOR'S ORGANIZATION.

REINFORCED CONCRETE

1. ALL CONCRETE WORK SHALL CONFORM TO THE "BUILDING CODE REQUIREMENTS FOR REINFORCED CONCRETE," ACI 318-16.

2. REINFORCING STEEL SHALL BE DEFORMED BARS ASTM A-615 (GRADE 60).

3. THE COMPRESSIVE STRENGTH AT 28 DAYS OF ALL CAST IN PLACE CONCRETE SHALL BE 4000 PSI USING TYPE II, PORTLAND CEMENT. SEE CIVIL DRAWINGS FOR SITE CONCRETE. FOUNDATION CONCRETE SHALL HAVE A 28-DAY COMPRESSIVE STRENGTH OF 4,000 PSI.

4. LAP SPLICES FOR REINFORCING BARS SHALL BE CLASS B IN ACCORDANCE WITH ACI 318-05, UNLESS NOTED OTHERWISE.

5. CLEAR CONCRETE COVER FOR REINFORCING STEEL:
   - A. WALLS: 2" EXTERIOR FACES; 3/4" INTERIOR FACES
   - B. MASONRY WALLS: LOCATE IN CENTER OF WALL (U.N.O.)
   - C. SLAB ON GRADE: 3/4" TOP STEEL; 1 1/2" BOTTOM STEEL
   - D. FOOTINGS: 2" FORMED EDGES

6. THE LONGITUDINAL REINFORCING STEEL IN BOND BEAMS, WALLS, AND FOOTINGS SHALL BE CONTINUOUS AROUND CORNERS. SEE TYPICAL DETAILS.

7. MECHANICAL VIBRATORS SHALL VIBRATE ALL CONCRETE.

8. UNLESS OTHERWISE DIRECTED BY THE OWNER, CONCRETE SLABS SHALL BE FINISHED TO THE FLATNESS CRITERIA NOTED IN THE CONCRETE SPECIFICATIONS ON SHEET S5.4, UNDER SECTION 3.04 - "CONCRETE FLOOR FINISHES AND TOLERANCES"

9. CONCRETE TESTING REPORTS SHALL BE KEPT ON FILE AT THE JOB SITE.

STRUCTURAL STEEL

1. ALL STRUCTURAL STEEL WORK SHALL CONFORM TO THE ANSI/AISC SIXTEENTH EDITION, SPECIFICATION FOR STRUCTURAL STEEL BUILDINGS.

2. STRUCTURAL STEEL ROLLED SHAPES SHALL BE ASTM A-992 GRADE 50 UNLESS NOTED OTHERWISE. STRUCTURAL STEEL PLATES AND ANGLES SHALL BE ASTM A-36.

3. STRUCTURAL PIPE COLUMNS SHALL BE ASTM A500 ROUND, TYPE E OR S, GRADE C. STRUCTURAL TUBES SHALL BE ASTM A500, GRADE C.

4. **NON-SHRINK GROUT FOR PLACEMENT BELOW ALL STRUCTURAL STEEL BASE PLATES SHALL BE NON-SHRINK GROUT PROVIDED SPECIFICALLY FOR USE BELOW STRUCTURAL STEEL BASE PLATES AND ACHIEVE A COMPRESSIVE STRENGTH OF 10,000 PSI AT 28 DAYS. GROUT BELOW BASE PLATES SHALL CONFORM TO ASTM C-109.**

5. **FRAMED BEAM CONNECTIONS SHALL DE DESIGNED BY A QUALIFIED PROFESSIONAL ENGINEER EMPLOYED BY THE FABRICATOR TO DEVELOP THE BEAM REACTIONS SHOWN ON STRUCTURAL PLANS. IN NO CASE SHALL THE LENGTH OF THE FRAMED CONNECTION BE LESS THAN 1/2 THE "T" DIMENSION OF THE BEAM WEB. WHERE REACTIONS ARE NOT SHOWN, THE BEAM END CONNECTIONS SHALL DEVELOP ONE HALF THE MAXIMUM ALLOWABLE UNIFORM LOAD FOR THE BEAM ASSUMING THE BEAM IS CONTINUOUSLY SUPPORTED LATERALLY.**

6. STEEL FRAMING CONNECTIONS SHALL BE BOLTED OR WELDED. BOLTS SHALL BE 3/4 INCH DIAMETER MINIMUM AND SHALL BE ASTM A-325-N, UNLESS NOTED OTHERWISE.

7. **USE CALIBRATED WRENCHES OR DIRECT TENSION INDICATORS AND HARDENED WASHERS WITH ALL HIGH STRENGTH BOLTS OR USE LOAD INDICATOR BOLTS.**

8. STEEL JOISTS SHALL BE CAMBERED PER STEEL JOIST INSTITUTE SPECIFICATIONS. STEEL JOIST SHALL ALSO BE DESIGNED TO RESIST THE NEW WIND UPLIFT LOADS INDICATED ON UPLIFT PRESSURES DIAGRAM, THIS SHEET. FOR UPLIFT CALCULATIONS, DEAD LOAD OF ROOFING SYSTEM AND STEEL DECK IS ASSUMED TO BE 10 PSF.

9. METAL DECK SHALL BE INSTALLED IN ACCORDANCE WITH THE STEEL DECK INSTITUTE SPECIFICATIONS, LATEST EDITION.

10. WELD WASHERS SHALL BE USED WITH METAL DECK THINNER THAN 22 GAUGE. DECK SHALL BE 50 KSI, MINIMUM.

11. ANCHOR BOLTS SHALL BE F1554, GR 55 SUPPLEMENT 1 (WELDABLE) HEADED BOLTS. MINIMUM ANCHOR BOLT EMBEDMENT SHALL BE 12 BOLT DIAMETERS UNLESS NOTED OTHERWISE. CLEAN ANCHOR BOLTS OF ALL GREASE, DIRT, ETC., BEFORE INSTALLATION.

12. WELDS SHOWN ON THE STRUCTURAL DRAWINGS ARE THE MINIMUM REQUIRED BY DESIGN. THE FABRICATOR'S DRAWINGS SHALL SHOW WELDS AND THEY SHALL CONFORM TO AWS D1.1 STRUCTURAL WELDING CODE BY THE AMERICAN WELDING SOCIETY. ALL WELDING SHALL BE DONE WITH E-70 SERIES ELECTRODES.

13. HARDENED WASHERS SHALL BE INSTALLED OVER SHORT SLOTTED OR OVERSIZE HOLES OCCURRING IN AN OUTER PLY OF A CONNECTION.

14. THE STEEL JOIST & JOIST GIRDER MANUFACTURER SHALL DESIGN THE JOISTS & JOIST GIRDERS FOR A NET UPLIFT FORCE AS SHOWN ON THE UPLIFT DIAGRAM ON THIS SHEET, AND SHALL FURNISH THE NECESSARY FRAMING TO ENSURE PROPER JOIST & JOIST GIRDER PERFORMANCE UNDER UPLIFT DUE TO WIND AS WELL AS GRAVITY LOADING CONDITIONS.

15. PROVIDE SPECIAL JOIST SEATS WHERE REQUIRED BY NARROW BEARING CONDITIONS.

16. PAINT ALL STRUCTURAL STEEL WITH ONE COAT OF RUST-INHIBITIVE PRIMER 2.5 MILS IN THICKNESS. THE COMPATIBILITY OF PRIMER AND ANY TOP COAT SHALL BE VERIFIED BEFORE ANY PAINTING IS PERFORMED. TOUCH-UP ALL EXPOSED METAL AFTER FIELD INSTALLATION. ALL STRUCTURAL STEEL WHICH IS EXPOSED TO THE ELEMENTS SHALL RECEIVE TWO COATS OF EXTERIOR ENAMEL WHICH IS COMPATIBLE WITH THE PRIMED SURFACE.

17. **STRUCTURAL STEEL SHOP DRAWINGS SHALL INCLUDE COMPLETE DETAILS, CONNECTIONS, AND SCHEDULES FOR FABRICATION AND ASSEMBLY OF STRUCTURAL STEEL MEMBERS. STRUCTURAL STEEL SHOP DRAWINGS SHALL NOT INCLUDE MISCELLANEOUS STEEL. SHOP DRAWINGS WILL NOT BE REVIEWED BY THE DESIGNER UNTIL AFTER THE GENERAL CONTRACTOR HAS THOROUGHLY REVIEWED THE SHOP DRAWINGS, AND COORDINATED THE SHOP DRAWINGS WITH OTHER AFFECTED TRADES. ONLY THREE SETS OF MARKED UP SHOP DRAWINGS SHALL BE RETURNED BY THE DESIGNER. REPRODUCTION OF STRUCTURAL DRAWINGS FOR SHOP DRAWINGS IS NOT PERMITTED.**

18. STEEL JOISTS AND JOIST GIRDER SHOP DRAWINGS SHALL BEAR THE SEAL AND SIGNATURE OF A REGISTERED ENGINEER IN THE PROJECT STATE CONFIRMING THE DESIGN OF JOISTS AND JOIST GIRDERS TO SJI SPECIFICATIONS AND FOR ALL LOADINGS SPECIFIED ON THE DRAWINGS. STEEL JOISTS SHOP DRAWINGS SHALL BE REVIEWED BY THE STRUCTURAL STEEL SUBCONTRACTOR PRIOR TO ENGINEER'S REVIEW.

OXFORD ARCHITECTURE

2934 Sidco Drive
Suite 120
Nashville, TN 37204

Architecture
Planning
Interior Architecture

bennett&pless
formerly WiSEEngineers
Experience Structural Expertise
Atlanta, Boca Raton, Charlotte, Chattanooga, Knoxville, Nashville, Orlando, Raleigh
1964 - 2024 Celebrating 60 Years of Structural Excellence
565 Marriott Drive, Suite 300
Nashville, Tennessee 37214
Tel 615 782 0100

Copyright 2024 • Bennett & Pless, Inc.
All Rights Reserved

B & P Job Number 24.02.117

TSC

TRACTOR SUPPLY COMPANY

BOUTTE LOUISIANA

This drawing and the design shown is the property of the architect. The reproduction, copying or use of this drawing without their written consent is prohibited and any infringement will be subject to legal action

Job Number: ??

Date: 07.18.2024

Revisions: △

Revisions: △

Revisions: △

STRUCTURAL GENERAL NOTES

Sheet Number: S5.0

STRUCTURAL GENERAL NOTES, CONT.

POST INSTALLED ANCHORS IN CONCRETE, CONCRETE MASONRY, AND ADHESIVE ANCHOR REINFORCING

1. POST-INSTALLED ANCHORS AND ADHESIVE ANCHORED REINFORCING STEEL SHALL ONLY BE USED WHERE SPECIFIED ON THE CONSTRUCTION DOCUMENTS. THE GENERAL CONTRACTOR SHALL OBTAIN APPROVAL FROM THE STRUCTURAL ENGINEER OF RECORD PRIOR TO USING POST INSTALLED ANCHORS FOR MISSING OR MISPLACED CAST-IN-PLACE ANCHORS. CARE SHALL BE GIVEN TO AVOID CONFLICTS WITH EXISTING REINFORCING. HOLES SHALL BE DRILLED AND CLEANED PER THE MANUFACTURER'S PRINTED INSTALLATION INSTRUCTIONS. ANCHORS SHALL BE INSTALLED IN ACCORDANCE WITH THE MANUFACTURER'S PRINTED INSTALLATION INSTRUCTIONS.

2. ALL POST INSTALLED ANCHORS AND ADHESIVES SHALL HAVE VALID AND CURRENT ICC-ESR REPORTS.

3. SUBSTITUTION REQUESTS, FOR PRODUCTS OTHER THAN THOSE SPECIFIED, SHALL BE SUBMITTED TO THE ARCHITECT AND STRUCTURAL ENGINEER OF RECORD WITH CALCULATIONS THAT ARE PREPARED AND SEALED BY A REGISTERED DESIGN PROFESSIONAL IN THE STATE IN WHICH THE PROJECT IS LOCATED SHOWING THAT THE SUBSTITUTED PRODUCT WILL ACHIEVE AN EQUIVALENT CAPACITY USING THE APPROPRIATE DESIGN PROCEDURE REQUIRED BY THE REFERENCED BUILDING CODE.

4. MECHANICAL ANCHORS FOR CONCRETE AS SHOWN ON THE CONSTRUCTION DOCUMENTS SHALL BE PROVIDED AS SPECIFIED WITHIN THE CONTRACT DOCUMENTS.

5. IN ADDITION TO THE MANUFACTURER'S PRINTED INSTALLATION INSTRUCTIONS, THE FOLLOWING GUIDELINES SHALL BE FOLLOWED FOR INSTALLATION OF ADHESIVE ANCHORS:
   - A. ADHESIVE ANCHORS SHALL BE INSTALLED IN CONCRETE HAVING A MINIMUM AGE OF 21 DAYS AT TIME OF ANCHOR INSTALLATION.
   - B. ADHESIVE ANCHORS SHALL BE INSTALLED IN DRY CONCRETE, AND DURING DRY CONDITIONS.
   - C. ADHESIVE ANCHORS SHALL BE INSTALLED IN HOLES PREDRILLED WITH A CARBIDE TIPPED DRILL BIT.
   - D. ADHESIVE ANCHORS SHALL BE INSTALLED WITHIN THE TEMPERATURE RANGE SPECIFIED IN THE MANUFACTURER'S PRINTED INSTALLATION INSTRUCTIONS, BUT NOT OUTSIDE OF THE DESIGN TEMPERATURE RANGE. (ADHESIVE ANCHOR DESIGN TEMPERATURE RANGE IS 75 DEGREES FAHRENHEIT (LONG TERM) AND 104 DEGREES FAHRENHEIT (SHORT TERM)) LOADS SHALL NOT BE APPLIED TO ADHESIVE ANCHORS UNTIL THE FULL CURING TIME ASSOCIATED WITH THE INSTALLATION TEMPERATURE HAS ELAPSED.

6. INSTALLATION OF ADHESIVE ANCHORS SHALL BE PERFORMED BY PERSONNEL CERTIFIED BY AN APPLICABLE CERTIFICATION PROGRAM. CERTIFICATION SHALL INCLUDE WRITTEN AND PERFORMANCE TESTS IN ACCORDANCE WITH THE ACI/CRSI ADHESIVE ANCHORS INSTALLER CERTIFICATION PROGRAM, OR EQUIVALENT.

7. CONTINUOUS SPECIAL INSPECTIONS SHALL BE PROVIDED FOR POST-INSTALLED ANCHORS IN ACCORDANCE WITH THE ANCHOR MPII AND/OR EVALUATION REPORT, UNLESS MORE SPECIFIC REQUIREMENTS ARE SPECIFIED IN THE CONSTRUCTION DOCUMENTS.

CONCRETE MASONRY

1. CONCRETE MASONRY SHALL CONFORM TO NATIONAL CONCRETE MSONRY ASSOCIATION SPECIFICATIONS FOR MASONRY STRUCTURES," AND SHALL HAVE A MINIMUM PRISM STRENGTH (F'M) OF 2,000 PSI.

2. MASONRY WALL CONTROL JOINTS SHALL BE LOCATED AS SHOWN ON THE ARCHITECTURAL DRAWINGS.

3. MASONRY UNITS SHALL CONFORM WITH ASTM C90 "STANDARD SPECIFICATIONS FOR LOADBEARING CONCRETE MASONRY UNITS" AND HAVE MINIMUM AVERAGE NET-AREA COMPRESSIVE STRENGTH OF 2150 PSI. MASONRY UNITS SHALL HAVE AN AVERAGE DENSITY WITHIN THE RANGE OF 105 TO 125 POUNDS PER CUBIC FEET.

4. GROUT FOR FILLING CONCRETE MASONRY CELLS SHALL CONFORM TO ASTM C476-09, "STANDARD SPECIFICATION FOR GROUT FOR MASONRY," AND SHALL HAVE A COMPRESSIVE PRISM STRENGTH (F'M) OF 3000 PSI AT 28 DAYS. THE SLUMP SHALL BE BETWEEN 9 INCHES AND 11 INCHES. WHERE THE MINIMUM DIMENSION OF ANY CONTINUOUS VERTICAL CELL IS 3 INCHES OR LESS, USE FINE GROUT. OTHERWISE, USE COARSE (PEA GRAVEL) GROUT.

5. MORTAR FOR CONCRETE MASONRY SHALL BE TYPE "S" AND SHALL CONFORM TO ASTM C270-08, "SPECIFICATION FOR MORTAR FOR UNIT MASONRY" AND HAVE A MINIMUM COMPRESSIVE STRENGTH OF 1800 PSI.

6. MASONRY CONSTRUCTION SHALL BE BUILT IN LIFTS NOT TO EXCEED 4 FEET PRIOR TO GROUTING CORES. KEY NEXT GROUT LIFT INTO PRIOR LIFT BY STOPPING FIRST LIFT 2" BELOW TOP OF BLOCK.

7. ALL REINFORCING BARS IN FILLED CELLS SHALL BE DOWELED INTO FOOTINGS WITH STANDARD 90-DEGREE HOOKS AND DOWELED 7 INCHES INTO BOND BEAMS AT TOP OF WALLS.

8. REINFORCEMENT IN WALLS SHALL BE PLACED IN THE CENTER OF THE WALL UNLESS NOTED OTHERWISE. SEE PLANS FOR REINFORCING.

9. MASONRY LAP SPLICES: SEE TABLE BELOW.

CONCRETE MASONRY REINFORCING LAP LENGTH SCHEDULE			MINIMUM BEND DIAMETERS
BAR SIZE	8" WALL	12" WALL	MIN. DIA. 6d
#3	16"	16"	NOTE: 1. d= BAR DIAMETER. BARS REQUIRED TO BE FIELD BENT SHALL BE BENT COLD TO THE MINIMUM DIAMETER SPECIFIED. FIELD BENDING IN EXCESS OF A 90 DEGREE BEND IS PROHIBITED.
#4	21"	21"	
#5	26"	26"	
#6	43"	40"	
#7	60"	46"	

NOTE:
*WHERE DROPPED WEB MASONRY IS INDICATED , MASONRY BOND BEAMS WITH U-NOTCHES OR BOTTOMS REMOVED FOR PASSAGE OF GROUT & REINFORCING MAY BE SUBSTITUTED. WHERE DROPPED WEB MASONRY IS USED, PROVIDE ACI APPROVED SCREENING/GROUT RETENTION MATERIAL TO ENSURE STOPPAGE OF GROUT TO CELLS BELOW WHERE LIMIT OF GROUTED CELLS ARE INDICATED.

PRE-ENGINEERED COLD FORMED STEEL TRUSSES

1. ROOF TRUSSES SHALL BE DESIGNED TO SUPPORT THE FOLLOWING LOADS:
   - A. TOP CHORD: DEAD LOAD - 17 PSF LIVE LOAD - 20 PSF SNOW LOAD - 0 PSF
   - B. BOTTOM CHORD: DEAD LOAD - 8 PSF

2. IN ADDITION TO UNIFORM LOADING SPECIFIED FOR TRUSS DESIGN, THE TRUSS SUPPLIER SHALL INCLUDE ANY CONCENTRATED LOADS CAUSED BY ARCHITECTURAL FEATURES OR MECHANICAL EQUIPMENT IN THE TRUSS DESIGN.

3. SEE ARCHITECTURAL DRAWINGS FOR TRUSS PROFILES, DIMENSIONS AND BEARING CONDITIONS.

4. A REGISTERED ENGINEER IN THE PROJECT STATE SHALL DESIGN THE TRUSSES AND THEIR CONNECTIONS TO THE SUPPORTING STRUCTURES. SHOP DRAWINGS, INCLUDING TRUSS DESIGN AND LAYOUT, BEARING THE ENGINEER'S SEAL AND SIGNATURE, SHALL BE SUBMITTED FOR REVIEW.

5. TRUSSES SHALL BE DESIGNED, FABRICATED, AND ERECTED IN ACCORDANCE WITH APPLICABLE STANDARDS OF THE AMERICAN IRON AND STEEL INSTITUTE "SPECIFICATIONS FOR THE DESIGN OF COLD FORMED STEEL STRUCTURAL MEMBERS" AND "DESIGN OF COLD-FORMED STEEL TRUSSES" AND THE LIGHT GAGE STEEL TRUSS ENGINEER'S ASSOCIATION "FIELD INSTALLATION GUIDE FOR COLD-FORMED STEEL TRUSSES".

COLD FORMED STUDS (CFS)

1. ALL WORK SHALL CONFORM WITH THE FOLLOWING STANDARDS:
   - A. AISI-2001 WITH 2004 SUPPLEMENT, "NORTH AMERICAN SPECIFICATION FOR THE DESIGN OF COLD-FORMED STEEL STRUCTURAL MEMBERS."
   - B. AISI S202-2001 WTIH 2004 SUPPLEMENT, "CODE OF STANDARD PRACTICE FOR COLD-FORMED STEEL FRAMING."
   - C. AISI S220-2001 WTIH 2004 SUPPLEMENT, "NORTH AMERICAN STANDARD FOR COLD-FORMED STEEL FRAMING - NON-STRUCTURAL MEMBERS"
   - D. AISI S240-2001 WTIH 2004 SUPPLEMENT, "NORTH AMERICAN STANDARD FOR COLD-FORMED STEEL STRUCTURAL FRAMING."
   - E. AISI S400-2001 WTIH 2004 SUPPLEMENT, "NORTH AMERICAN STANDARD FOR SEISMIC DESIGN OF COLD-FORMED STEEL STRUCTURAL SYSTEMS.

2. COMPONENTS SHALL BE MADE OF COLD FORMED STEEL COMPLYING WITH ASTM A1003/A1003M WITH A GALVANIZED COATING. COATING SHALL BE G60 COATING WEIGHT MINIMUM, COMPLYING WITH ASTM C955. MINIMUM YIELD STRENGTH SHALL BE AS FOLLOWS: 33 KSI FOR 43 MIL (19 GAUGE) AND LIGHTER; 50 KSI FOR 5 MIL (16 GAUGE) AND HEAVIER.

3. COMPONENT SECTION PROPERTIES INCLUDING, BUT NOT LIMITED TO, AREA (A), MOMENT OF INERTIA (Ix AND Iy) AND RADIUS OF GYRATION (Rx, Ry) SHALL MEET OR EXCEED PUBLISHED VALUES BY CLARKDIETRICH BUILDING SYSTEMS FOR MEMBER SIZES INDICATED.

4. PROVIDE FRAMING ACCESSORIES THAT MEET OR EXCEED BASIS OF DESIGN PRODUCTS BY CLARKDIETRICH BUILDING SYSTEMS. THESE PRODUCTS MAY INCLUDE BUT ARE NOT LIMITED TO:
   - A. SUPPLEMENTARY FRAMING.
   - B. BRACING, BRIDGING, AND SOLID BLOCKING.
   - C. ANCHOR CLIPS.
   - D. END CLIPS.
   - E. FOUNDATION CLIPS.
   - F. GUSSET PLATES.
   - G. STUD KICKERS AND KNEE BRACES.
   - H. JOIST HANGERS AND END CLOSURES.
   - I. HOLE REINFORCING PLATES.
   - J. BACKER PLATES.

5. OTHER CONNECTORS FROM SIMPSON STRONG-TIE COMPANY MAY BE SPECIFIED ON THE DRAWINGS.

6. SCREWS SHALL BE SELF-DRILLING, SELF-TAPPING STEEL SCREWS COMPLYING WITH ASTM C1513. GALVANIZED, PLATED OR OIL-PHOSPHATE COATING SHALL COMPLY WITH ASTM B633 AND BE PROVIDED AS NEEDED FOR REQUIRED CORROSION RESISTANCE.

7. WELDING IS PERMITTED ON 18 GAUGE OR HEAVIER MATERIAL ONLY. QUALITY WELDING OPERATORS SHALL BE QUALIFIED IN ACCORDANCE WITH AWS D1.3-2008, "STRUCTURAL WELDING CODE—SHEET METAL." TOUCH UP ALL WELDS WITH ZINC RICH PAINT IN COMPLIANCE WITH ASTM A780.

8. THE JOIST ENDS SHALL BE REINFORCED TO ADEQUATELY STIFFEN THE JOIST WEB AND TRANSFER LOADS TO THE SUPPORTS. MINIMUM END BEARING SHALL BE 1 1/2 INCHES.

9. STUDS SHALL SIT SQUARELY IN THE TOP AND BOTTOM RUNNER TRACK WITH FIRM ABUTMENT AGAINST TRACK WEBS. STUDS SHALL BE ALIGNED OR PLUMBED AND SECURELY FASTENED TO THE FLANGES OF BOTH TOP AND BOTTOM RUNNER TRACK. STUDS SHALL BE POSITIONED IN THE RUNNER TRACK SO AS TO BE ALIGNED DIRECTLY BELOW FLOOR ROOF OR CEILING FRAMING MEMBERS OVERHEAD. IF UNABLE TO CENTER AND DIRECTLY TRANSFER LOADS FROM FLOOR OR ROOF FRAMING (SUCH AS AT OPENINGS) TO THE STUDS, LINTELS SHALL BE PROVIDED.

10. JOINING OF FRAMING MEMBERS SHALL BE MADE WITH SELF-DRILLING SCREWS OR WELDING. WIRE TYING OF FRAMING MEMBERS IN STRUCTURAL APPLICATIONS SHALL NOT BE PERMITTED.

11. SPLICES IN STEEL JOISTS OR STUDS SHALL NOT BE PERMITTED.

12. DURING ERECTION, THE CONTRACTOR SHALL PROVIDE MEANS OF ADEQUATE DISTRIBUTION OF CONCENTRATED LOADS SO THAT THE LOAD CARRYING CAPACITYOF ANY STEEL MEMBER IS NOT EXCEEDED.

13. PERFORMANCE REQUIREMENTS
    - A. CALCULATE STRUCTURAL PROPERTIES PER AISI - SPECIFICATIONS FOR THE DESIGN OF COLD-FORMED STEEL STRUCTURAL MEMBERS, 2007.

14. SUBMITTALS
    - A. SUBMIT DOCUMENTATION.
    - B. PRODUCT DATA: MANUFACTURER'S DATA SHEETS ON EACH PRODUCT TO BE USED, INCLUDING:
      - a. PREPARATION INSTRUCTIONS AND RECOMMENDATIONS.
      - b. STORAGE AND HANDLING REQUIREMENTS AND RECOMMENDATIONS.
      - c. INSTALLATION METHODS.
    - C. STRUCTURAL CALCULATIONS:
      - a. ALL SHOP DRAWING SUBMITTALS SHALL BE SEALED BY A PROFESSIONAL ENGINEER REGISTERED IN THE PROVINCE OF THE PROJECT LOCATION. ENGINEER SHALL HAVE A MINIMUM OF 5 YEARS EXPERIENCE WITH PROJECTS OF SIMILAR SCOPE.
      - b. DESCRIPTION OF DESIGN CRITERIA.
      - c. SELECTION OF FRAMING COMPONENTS, ACCESSORIES AND WELDED CONNECTION REQUIREMENTS.
      - d. VERIFICATION OF ATTACHMENTS TO STRUCTURE AND ADJACENT FRAMING COMPONENTS.

DELEGATED DESIGN

1. THE FOLLOWING ELEMENTS SHALL BE CONSIDERED DELEGATED DESIGN AND SHALL REQUIRE SIGNED AND SEALED SHOP DRAWINGS AND CALCULATIONS PREPARED BY A PROFESSIONAL ENGINEER LICENSED IN THE PROJECT STATE.
   - A. PRE-ENGINEERED METAL BUILDING
   - B. PRE-ENGINEERED TRUSSES
   - C. STOREFRONT OPENING SYSTEMS.
   - D. LIVE GOODS FOUNDATION AND FRAMING.
   - E. TIMBER PILE DESIGN / VERIFICATION OF CAPACITY.

STRUCTURAL SUBMITTALS

1. CONCRETE MIX DESIGNS
2. CONCRETE REINFORCING FOR ALL FOUNDATION COMPONENTS
3. CONCRETE MASONRY UNIT (CMU) REINFORCING FOR ALL MASONRY PORTIONS OF THE WORK.
4. CONCRETE MASONRY UNIT (CMU) AND ACCESSORY PRODUCT DATA INCLUDING:
   - a. COMPOSITION AND LEGACY TESTING DATA FOR CMU
   - b. COMPOSITION AND LEGACY TESTING DATA FOR MORTAR
   - c. COMPOSITION AND LEGACY TESTING DATA FOR GROUT
   - d. LADDER-TYPE JOINT REINFORCING
   - e. JOINT AND JOINT COVER MATERIAL
5. STRUCTURAL STEEL COLUMNS, BASE PLATES, CAP PLATES, SHEAR PLATES, CONNECTIONS BETWEEN / AMONG ALL STRUCTURAL STEEL MEMBERS.
6. STRUCTURAL STEEL JOIST AND DECK, INCLUDING LAYOUT, COMPOSITION, AND CONNECTIONS.
7. COLD FORMED STEEL (CFS) PRE-ENGINEERED TRUSSES:
   - a. MATERIALS
   - b. DESIGN DRAWINGS, STAMPED BY THE TRUSS DESIGNER, LICENSED IN THE PROJECT STATE
8. NON-LOAD BEARING COLD FORMED STEEL (CFS) PRE-ENGINEERED STUDS AND JOISTS.

ABBREVIATIONS

ARCH	ARCHITECT, ARCHITECTURAL
BRG	BEARING
C/L	CENTERLINE
CFS	COLD FORMED STEEL
CMU	CONCRETE MASONRY UNIT
CONC	CONCRETE
CONT	CONTINUOUS
DIA	DIAMETER
DWGS	DRAWINGS
EL	ELEVATION
FDN	FOUNDATION
FFE	FINISHED FLOOR ELEVATION
FTG	FOOTING
FV	FIELD VERIFY
INFO	INFORMATION
JST	JOIST
PEMB	PRE-ENGINEERED METAL BUILDING
PL	PLATE
REINF	REINFORCING
RTU	ROOF TOP UNIT
SHT	SHEET
SPC	SPACING
UNO	UNLESS NOTED OTHERWISE
&	AND

OXFORD ARCHITECTURE

2934 Sidco Drive
Suite 120
Nashville, TN 37204

Architecture
Planning
Interior Architecture

bennett&pless
formerly WiSEngineers
Experience Structural Expertise
Atlanta, Boca Raton, Charlotte, Chattanooga, Knoxville, Nashville, Orlando, Raleigh
1964 - 2024 Celebrating 60 Years of Structural Excellence
565 Marriott Drive, Suite 300
Nashville, Tennessee 37214
Tel 615 782 0100

Copyright 2024 • Bennett & Pless, Inc.
All Rights Reserved

B & P Job Number 24.02.117

TSC

TRACTOR SUPPLY COMPANY

BOUTTE LOUISIANA

This drawing and the design shown is the property of the architect. The reproduction, copying or use of this drawing without their written consent is prohibited and any infringement will be subject to legal action

Job Number: ??

Date: 07.18.2024

Revisions: △

Revisions: △

Revisions: △

STRUCTURAL GENERAL NOTES, CONT.

Sheet Number: S5.1

QUALITY ASSURANCE PLAN / PROPSED STATEMENT OF SPECIAL INSPECTION

STRUCTURAL SPECIAL INSPECTION STATEMENT

THIS STATEMENT OF SPECIAL INSPECTIONS IS SUBMITTED AS A CONDITION FOR PERMIT ISSUANCE IN ACCORDANCE WITH THE SPECIAL INSPECTION AND STRUCTURAL TESTING REQUIREMENTS OF THE BUILDING CODE. IT INCLUDES A SCHEDULE OF SPECIAL INSPECTION SERVICES APPLICABLE TO THIS PROJECT AS WELL AS THE NAME OF THE SPECIAL INSPECTOR TO BE RETAINED FOR CONDUCTING THESE INSPECTIONS AND TESTS. THIS STATEMENT OF SPECIAL INSPECTIONS ENCOMPASSES STRUCTURAL DISCIPLINE.

THE SPECIAL INSPECTOR SHALL KEEP RECORDS OF ALL INSPECTIONS AND SHALL FURNISH INSPECTION REPORTS TO THE BUILDING OFFICIAL AND THE REGISTERED DESIGN PROFESSIONAL IN RESPONSIBLE CHARGE OF SPECIAL INSPECTION. DISCOVERED DISCREPANCIES SHALL BE BROUGHT TO THE IMMEDIATE ATTENTION OF THE CONTRACTOR FOR CORRECTION. IF SUCH DISCREPANCIES ARE NOT CORRECTED, THE DISCREPANCIES SHALL BE BROUGHT TO THE ATTENTION OF THE BUILDING OFFICIAL AND THE REGISTERED DESIGN PROFESSIONAL RESPONSIBLE IN CHARGE OF SPECIAL INSPECTION. THE SPECIAL INSPECTION PROGRAM DOES NOT RELIEVE THE CONTRACTOR OF HIS OR HER RESPONSIBILITIES.

INTERIM REPORTS SHALL BE SUBMITTED TO THE BUILDING OFFICIAL AND THE REGISTERED DESIGN PROFESSIONAL IN RESPONSIBLE CHARGE OF SPECIAL INSPECTION AND THE ENGINEER OF RECORD.

A FINAL REPORT OF SPECIAL INSPECTIONS DOCUMENTING COMPLETION OF ALL REQUIRED SPECIAL INSPECTIONS, TESTING AND CORRECTION OF ANY DISCREPANCIES NOTES IN THE INSPECTIONS SHALL BE SUBMITTED BY ALL SPECIAL INSPECTORS AND THE DESIGN PROFESSIONAL IN RESPONSIBLE CHARGE OF SPECIAL INSPECTIONS PRIOR TO ISSUANCE OF A CERTIFICATE OF USE AND OCCUPANCY.

JOB SITE SAFETY MEANS AND METHODS OF CONSTRUCTION ARE SOLELY THE RESPONSIBILITY OF THE CONTRACTOR.

THIS STATEMENT OF SPECIAL INSPECTIONS INCLUDES THE FOLLOWING BUILDING SYSTEMS:

- ☒ FABRICATORS
- ☒ SOILS
- ☐ PILE FOUNDATIONS
- ☐ PIER FOUNDATIONS
- ☒ CONCRETE CONSTRUCTION
- ☐ PRECAST CONCRETE
- ☒ MASONRY LEVEL 1
- ☐ MASONRY LEVEL 2
- ☒ STRUCTURAL STEEL
- ☐ COLD-FORMED STEEL FRAMING
- ☒ STEEL CONSTRUCTION: OTHER
- ☐ SEISMIC RESISTANCE
- ☐ WIND RESISTANCE
- ☐ WOOD CONSTRUCTION
- ☐ SPECIAL CASES
- ☒ OPEN-WEB STEEL JOISTS AND JOIST GIRDERS

REGISTERED DESIGN PROFESSIONAL IN RESPONSIBLE CHARGE**

RESPONSIBILITY	FIRM	ADDRESS AND TELEPHONE NUMBER
1.	-	-
2.	-	-
3.	-	-

NOTE:
1. **REGISTERED DESIGN PROFESSIONAL IN RESPONSIBLE CHARGE: A REGISTERED DESIGN PROFESSIONAL ENGAGED BY THE OWNER TO REVIEW AND COORDINATION THE SPECIAL INSPECTION AS DETERMINED BY THE BUILDING OFFICIAL, FOR COMPATIBILITY WITH THE DESIGN OF THE BUILDING OF STRUCTURE INCLUDING SUBMITTAL DOCUMENTS PREPARED BY OTHERS, DEFERRED SUBMITTAL DOCUMENTERS AND PHASED SUBMITTAL DOCUMENTS.
2. ENGINEER OF RECORD HAS NOT BEEN ENGAGED AS THE REGISTERED DESIGN PROFESSIONAL IN RESPONSIBLE CHARGE OF SPECIAL INSPECTIONS.

SPECIAL INSPECTION AGENCIES

1.	-	-
2.	-	-
3.	-	-

NOTES:

1. THE INSPECTORS AND TESTING AGENCIES SHALL BE ENGAGED BY THE OWNER OR THE OWNER'S AGENT, AND NOT BY THE CONTRACTOR.
2. ANY CONFLICT OF INTEREST MUST BE DISCLOSED TO THE BUILDING OFFICIAL AND THE DESIGN PROFESSIONAL PRIOR TO COMMENCING WORK.
3. THE MINIMUM QUALIFICATIONS OF THE SPECIAL INSPECTOR(S) AND/OR TESTING AGENCIES SHALL BE THOSE LISTED IN THE MINIMUM SPECIAL INSPECTOR QUALIFICATIONS TABLE. THE QUALIFICATIONS OF THE SPECIAL INSPECTOR(S) AND/OR TESTING AGENCIES MAY BE SUBJECT TO THE APPROVAL OF THE BUILDING OFFICIAL.
4. INSPECTION OF FABRICATORS IS NOT REQUIRED WHERE THE FABRICATOR IS APPROVED IN ACCORDANCE WITH SECTION 1704.2.2 OF THE BUILDING CODE.

SPECIAL INSPECTION SCHEDULE: FABRICATORS

VERIFICATION AND INSPECTION TASK	APPLICABLE TO THIS PROJECT?	FREQUENCY	
		CONTINUOUS	PERIODIC
1. VERIFY FABRICATION AND IMPLEMENTATION PROCEDURES:	YES		
A. STEEL CONSTRUCTION **	YES	-	X
B. CONCRETE CONSTRUCTION (INCLUDING REBAR FABRICATION)	YES	-	X
C. WOOD CONSTRUCTION **	NO	-	X
D. COLD FORMED METAL CONSTRUCTION	YES	-	X
E. OTHER CONSTRUCTION	YES	-	X

**IF FABRICATOR IS NOT EXEMPT PER IBC CHAPTER 17.

SPECIAL INSPECTION SCHEDULE: SOILS

VERIFICATION AND INSPECTION TASK	APPLICABLE TO THIS PROJECT?	FREQUENCY	
		CONTINUOUS	PERIODIC
1. VERIFY MATERIALS BELOW SHALLOW FOUNDATIONS ARE ADEQUATE TO ACHIEVE THE DESIGN BEARING CAPACITY.	YES	-	X
2. VERIFY EXCAVATIONS ARE EXTENDED TO PROPER DEPTH AND HAVE REACHED PROPER MATERIAL.	YES	-	X
3. PERFORM CLASSIFICATION AND TESTING OF COMPACTED FILL MATERIALS.	YES	-	X
4. VERIFY USE OF PROPER MATERIALS, DENSITIES AND LIFT THICKNESS DURING PLACEMENT AND COMPACTION OF COMPACTED FILL.	YES	X	-
5. PRIOR TO PLACEMENT OF COMPACTED FILL, OBSERVE SUBGRADE AND VERIFY THAT SITE HAS BEEN PREPARED PROPERLY.	YES	-	X

SPECIAL INSPECTION SCHEDULE: CONCRETE CONSTRUCTION

VERIFICATION AND INSPECTION TASK	APPLICABLE TO THIS PROJECT?	FREQUENCY	
		CONTINUOUS	PERIODIC
1. INSPECTION OF REINFORCING STEEL, INCLUDING PLACEMENT.	YES	-	X
2. INSPECTION OF REINFORCING STEEL WELDING IN ACCORDANCE WITH THE SPECIAL INSPECTION SCHEDULE: STEEL CONSTRUCTION OTHER THAN STRUCTURAL STEEL ITEM 3.	YES	-	X
3. INSPECTION OF ANCHORS CAST IN CONCRETE WHERE ALLOWABLE LOADS HAVE BEEN INCREASED OR WHERE STRENGTH DESIGN IS USED.	YES	-	X
4. INSPECTION OF ANCHORS POST-INSTALLED IN HARDENED CONCRETE MEMBERS.	YES	-	X
5. VERIFYING USE OF REQUIRED DESIGN MIX.	YES	-	X
6. AT THE TIME FRESH CONCRETE IS SAMPLED TO FABRICATE SPECIMENS FOR STRENGTH TESTS, PERFORM SLUMP AND AIR CONTENT TESTS, AND DETERMINE THE TEMPERATURE OF THE CONCRETE.	YES	X	-
7. INSPECTION OF CONCRETE AND SHOTCRETE PLACEMENT FOR PROPER APPLICATION TECHNIQUES	YES	X	-
8. INSPECTION FOR MAINTENANCE OF SPECIFIED CURING TEMPERATURE AND TECHNIQUES.	YES	-	X
9. INSPECTION OF PRESTRESSED CONCRETE: A. APPLICATION OF PRESTRESSING FORCES.	NO	X	-
B. GROUTING OF BONDED PRESTRESSING TENDONS IN THE SEISMIC- FORCE-RESISTING SYSTEM.	NO	X	-
10. ERECTION OF PRECAST CONCRETE MEMBERS.	NO	-	X
11. VERIFICATION OF IN-SITU CONCRETE STRENGTH, PRIOR TO STRESSING OF TENDONS IN POST-TENSIONED CONCRETE AND PRIOR TO REMOVAL OF SHORES AND FORMS FROM BEAMS AND STRUCTURAL SLABS.	YES	-	X
12. INSPECT FORMWORK FOR SHAPE, LOCATION AND DIMENSIONS OF THE CONCRETE MEMBER BEING FORMED.	YES	-	X

NOTE:
1. SPECIAL INSPECTIONS FOR ISOLATED SPREAD CONCRETE FOOTINGS, CONTINUOUS CONCRETE FOOTINGS SUPPORTING WALLS, AND CONCRETE FOUNDATION WALLS SHALL BE IN ACCORDANCE WITH THIS TABLE.

SPECIAL INSPECTION SCHEDULE: MASONRY CONSTRUCTION - LEVEL 1

VERIFICATION AND INSPECTION TASK	APPLICABLE TO THIS PROJECT?	FREQUENCY	
		CONTINUOUS	PERIODIC
1. COMPLIANCE WITH REQUIRED INSPECTION PROVISIONS OF THE CONSTRUCTION DOCUMENTS AND THE APPROVED SUBMITTALS SHALL BE VERIFIED.	YES	-	X
2. VERIFICATION OF f'm AND f'AAC PRIOR TO CONSTRUCTION EXCEPT WHERE SPECIFICALLY EXEMPTED BY THE BUILDING CODE.	YES	-	X
3. VERIFICATION OF SLUMP FLOW AND VSI AS DELIVERED TO THE SITE FOR SELF-CONSOLIDATING GROUT.	YES	X	-
4. AS MASONRY CONSTRUCTION BEGINS, THE FOLLOWING SHALL BE VERIFIED TO ENSURE COMPLIANCE: A. PROPORTIONS OF SITE-PREPARED MORTAR.	YES	-	X
B. CONSTRUCTION OF MORTAR JOINTS.	YES	-	X
C. LOCATION OF REINFORCEMENT, CONNECTORS, ANCHORAGES.	YES	-	X
D. PRESTRESSING TECHNIQUE.	NO	-	X
E. GRADE AND SIZE OF PRESTRESSING TENDONS AND ANCHORAGES.	NO	-	X
5. DURING CONSTRUCTION, THE INSPECTION PROGRAM SHALL VERIFY: A. SIZE AND LOCATION OF STRUCTURAL ELEMENTS.	YES	-	X
B. TYPE, SIZE AND LOCATION OF ANCHORS, INCLUDING OTHER DETAILS OF ANCHORAGE OF MASONRY TO STRUCTURAL MEMBERS FRAMES OR OTHER CONSTRUCTION.	YES	-	X
C. SPECIFIED SIZE, GRADE AND TYPE OF REINFORCEMENT.	YES	-	X
D. WELDING OF REINFORCING BARS.	YES	X	-
E. PREPARATION, CONSTRUCTION AND PROTECTION OF MASONRY DURING COLD WEATHER (TEMPERATURE BELOW 40°F) OR HOT WEATHER (TEMPERATURE ABOVE 90°F).	YES	-	X
F. APPLICATION AND MEASUREMENT OF PRESTRESSING FORCE.	NO	-	X
6. PRIOR TO GROUTING, THE FOLLOWING SHALL BE VERIFIED TO ENSURE COMPLIANCE: A. GROUT SPACE IS CLEAN.	YES	-	X
B. PLACEMENT OF REINFORCEMENT AND CONNECTORS.	YES	-	X
C. PROPORTIONS OF SITE-PREPARED GROUT AND PRESTRESSING GROUT FOR BONDED TENDONS.	NO	-	X
D. CONSTRUCTION OF MORTAR JOINTS.	YES	-	X
7. GROUT PLACEMENT SHALL BE VERIFIED TO ENSURE COMPLIANCE WITH CODE AND CONSTRUCTION DOCUMENT PROVISIONS.	YES	X	-
A. GROUTING OF PRESTRESSING BONDED TENDONS.	NO	X	-
8. PREPARATION OF ANY REQUIRED GROUT SPECIMENS, MORTAR SPECIMENS AND/OR PRISMS SHALL BE OBSERVED.	YES	-	X

OXFORD ARCHITECTURE

2934 Sidco Drive
Suite 120
Nashville, TN 37204

Architecture
Planning
Interior Architecture

bennett&pless
formerly WiSEngineers
Experience Structural Expertise
Atlanta, Boca Raton, Charlotte, Chattanooga, Knoxville, Nashville, Orlando, Raleigh
1964 - 2024 Celebrating 60 Years of Structural Excellence
565 Marriott Drive, Suite 300
Nashville, Tennessee 37214
Tel 615 782 0100

Copyright 2024 • Bennett & Pless, Inc.
All Rights Reserved

B & P Job Number 24.02.117

TSC

TRACTOR SUPPLY COMPANY

BOUTTE LOUISIANA

This drawing and the design shown is the property of the architect. The reproduction, copying or use of this drawing without their written consent is prohibited and any infringement will be subject to legal action

Job Number: ??

Date: 07.18.2024

Revisions: △

Revisions: △

Revisions: △

QUALITY ASSURANCE / PROPOSED STATEMENT OF SPECIAL INSPECTIONS

Sheet Number: S5.2

QUALITY ASSURANCE PLAN / PROPSED STATEMENT OF SPECIAL INSPECTION, CONT.

SPECIAL INSPECTION SCHEDULE: STRUCTURAL STEEL CONSTRUCTION

VERIFICATION AND INSPECTION TASK	APPLICABLE TO THIS PROJECT?	FREQUENCY	
		CONTINUOUS	PERIODIC
1. MATERIAL VERIFICATION OF HIGH-STRENGTH BOLTS, NUTS AND WASHERS: A. IDENTIFICATION MARKINGS TO CONFORM TO ASTM STANDARDS SPECIFIED IN THE APPROVED CONSTRUCTION DOCUMENTS.	YES	-	X
B. MANUFACTURER'S CERTIFICATE OF COMPLIANCE REQUIRED.	YES	-	X
2. INSPECTION OF HIGH-STRENGTH BOLTING:	YES	-	X
A. PRETENSIONED AND SLIP CRITICAL JOINTS USING TURN-OF-NUT WITH MATCHMARKING, TWIST-OFF BOLT, CALIBRATED WRENCH, OR DIRECT TENSION INDICATOR METHODS OF INSTALLATION.	YES	-	X
B. PRETENSIONED AND SLIP-CRITICAL JOINTS USING TURN-OF-NUT WITHOUT MATCHMARKING OR CALIBRATED WRENCH METHODS OF INSTALLATION .	NO	X	-
3. MATERIAL VERIFICATION OF STRUCTURAL STEEL: A. IDENTIFICATION MARKINGS TO CONFORM TO ASTM STANDARDS SPECIFIED IN THE APPROVED CONSTRUCTION DOCUMENTS AND AISC 360.	YES	-	X
B. MANUFACTURER'S CERTIFIED TEST REPORTS.	YES	-	X
4. MATERIAL VERIFICATION OF WELD FILLER MATERIALS: A. IDENTIFICATION MARKINGS TO CONFORM TO AWS SPECIFICATION IN THE APPROVED CONSTRUCTION DOCUMENTS	YES	-	X
B. MANUFACTURER'S CERTIFICATE OF COMPLIANCE REQUIRED.	YES	-	X
5. INSPECTION OF WELDING, STRUCTURAL STEEL: A. COMPLETE AND PARTIAL PENETRATION GROOVE WELDS.	YES	X	-
B. MULTIPASS FILLET WELDS	YES	X	-
C. SINGLE-PASS FILLET WELDS > 5/16"	YES	X	-
D. SINGLE-PASS FILLET WELDS ≤ 5/16"	YES	-	X
6. INSPECTION OF STEEL FRAME JOINT DETAILS FOR COMPLIANCE WITH APPROVED CONSTRUCTION DOCUMENTS: A. DETAILS SUCH AS BRACING AND STIFFENING.	YES	-	X
B. MEMBER LOCATIONS.	YES	-	X
C. APPLICATION OF JOINT DETAILS AT EACH CONNECTION.	YES	-	X

SPECIAL INSPECTION SCHEDULE: STEEL CONSTRUCTION OTHER THAN STRUCTURAL STEEL

VERIFICATION AND INSPECTION TASK	APPLICABLE TO THIS PROJECT?	FREQUENCY	
		CONTINUOUS	PERIODIC
1. MATERIAL VERIFICATION OF COLD-FORMED STEEL DECK: A. IDENTIFICATION MARKINGS TO CONFORM TO ASTM STANDARDS SPECIFIED IN THE APPROVED CONSTRUCTION DOCUMENTS.	YES	-	X
B. MANUFACTURER'S CERTIFICATE OF COMPLIANCE REQUIRED.	YES	-	X
2. INSPECTION OF WELDING, COLD-FORMED STEEL DECK: A. ROOF DECK WELDS.	YES	-	X
3. INSPECTION OF WELDING, REINFORCING STEEL: A. VERIFICATION OF WELDABILITY OF REINFORCING STEEL OTHER THAN ASTM A 706.	YES	-	X
B. REINFORCING STEEL RESISTING FLEXURAL AND AXIAL FORCES IN INTERMEDIATE AND SPECIAL MOMENT FRAMES, AND BOUNDARY ELEMENTS OF SPECIAL STRUCTURAL WALLS OF CONCRETE AND SHEAR REINFORCEMENT.	NO	X	-
C. SHEAR REINFORCEMENT.	YES	X	-
D. OTHER REINFORCING STEEL.	YES	-	X
4. INSPECTION OF COLD-FORMED STEEL TRUSSES: A. VERIFY TEMPORARY INSTALLATION RESTRAINT/BRACING ARE INSTALLED IN ACCORDANCE WITH APPROVED TRUSS SUBMITTAL PACKAGE.	YES	-	X
B. VERIFY PERMANENT INDIVIDUAL TRUSS MEMBER RESTRAINT/BRACING ARE INSTALLED IN ACCORDANCE WITH APPROVED TRUSS SUBMITTAL PACKAGE.	YES	-	X

SPECIAL INSPECTION SCHEDULE: OPEN-WEB STEEL JOISTS AND JOIST GIRDERS

VERIFICATION AND INSPECTION TASK	APPLICABLE TO THIS PROJECT?	FREQUENCY	
		CONTINUOUS	PERIODIC
1. INSTALLATION OF OPEN-WEB STEEL JOISTS AND JOIST GIRDERS A. END CONNECTIONS - WELDING OR BOLTED.	YES	-	X
B. BRIDGING - HORIZONTAL OR DIAGONAL	YES	-	X
2. STANDARD BRIDGING	YES	-	X
3. BRIDGING THAT DIFFERS FROM THE SJI SPECIFICATIONS LISTED IN SECTION 2207.1	YES	-	X

OXFORD ARCHITECTURE

2934 Sidco Drive
Suite 120
Nashville, TN 37204

Architecture
Planning
Interior Architecture

bennett&pless
formerly WiSEngineers
Experience Structural Expertise
Atlanta, Boca Raton, Charlotte, Chattanooga, Knoxville, Nashville, Orlando, Raleigh
1964 - 2024 Celebrating 60 Years of Structural Excellence
565 Marriott Drive, Suite 300
Nashville, Tennessee 37214
Tel 615 782 0100

Copyright 2024 • Bennett & Pless, Inc.
All Rights Reserved

B & P Job Number 24.02.117

TSC

TRACTOR SUPPLY COMPANY

BOUTTE
LOUISIANA

This drawing and the design shown is the property of the architect. The reproduction, copying or use of this drawing without their written consent is prohibited and any infringement will be subject to legal action

Job Number: ??

Date: 07.18.2024

Revisions: △

Revisions: △

Revisions: △

QUALITY ASSURANCE / PROPOSED STATEMENT OF SPECIAL INSPECTIONS, CONT.

Sheet Number: S5.3

CONCRETE SPECIFICATIONS

PART 1 - GENERAL

1.01 QUALITY ASSURANCE

A. Ready-Mix Concrete Supplier: A firm experienced in producing ready-mixed concrete that complies with ASTM C94 requirements for production facilities and equipment. Comply with ACI 301, "Specification for Structural Concrete."
   1. Manufacturer certified according to NRMCA's "Certification of Ready-Mixed Concrete Production Facilities." Certification shall not be more than twelve months old.

B. Concrete Contractor Qualification: Concrete contractor shall include in their bid package to the general contractor, a minimum of three similar and successful projects that clearly indicates the ability to successfully perform the work and to achieve the interior slab on ground tolerances required in this specification. The Concrete Contractor's team shall have participated in the majority of the referenced projects, and that team shall remain the same throughout the duration of this project. Concrete Contractor's qualification shall be submitted as part of the bid package. The Owner has rights to reject the Concrete Contractor.

C. Testing Agency Qualifications: An independent agency, qualified according to ASTM C1077 and ASTM E329 for testing indicated, as documented according to ASTM E548.
   1. Personnel conducting field tests shall be qualified as ACI Concrete Field-Testing Technician, Grade 1, according to ACI CP-01 or an equivalent certification program.
   2. Personnel performing laboratory tests shall be ACI-certified Concrete Strength Testing Technician and Concrete Laboratory Testing Technician - Grade I. Testing Agency laboratory supervisor shall be an ACI-certified Concrete Laboratory Testing Technician - Grade II.

D. Trained Applicator: General contractors bidding or negotiating a Tractor Supply project shall contact Euclid Chemical to obtain a list of Trained Applicators located within the geographic region of the project. General Contractors shall solicit and accept pricing only from those applicators as provided by Euclid Chemical. **The Trained Applicator selected for the initial application of joint filler and liquid densifier/sealer shall be the same as for the polishing process and additional application of liquid densifier/sealer.**
   1. Philip Brandt: Euclid Chemical - 877-438-3826 / pbrandt@euclidchemical.com

E. Concrete Slab on Ground Pre-Installation Conference (Tractor Supply Requirement): At least 30 days prior to the start of concrete slab construction, the general contractor shall conduct a meeting to review the proposed concrete mix designs and to discuss the required methods and procedures to achieve the requirements of this specification. The general contractor shall send a pre-concrete conference agenda to all attendees 10 days prior to the scheduled date of the conference.
   1. The general contractor shall require responsible representatives of every party concerned with the concrete work to attend the conference, including, but not limited to the following:
      a. General Contractor: Project Manager and Superintendent
      b. Ready-mix Concrete Producer: Quality Control Manager
      c. Concrete Contractor: Foreman
      d. Testing Agency: Project Manager and Field Rep for concrete mixes, quality control, floor tolerance testing, etc.
      e. Owner Representative: If Required
      f. Trained Applicator: Liquid densifier sealer and joint filling applicator
      g. Phil Brandt: Euclid Chemical (877-438-3826) / pbrandt@euclidchemical.com
   2. Minutes of the meeting shall be recorded, typed, and printed by the general contractor and distributed to all concerned parties, including the architect, structural engineer, and Tractor Supply Project Manager, within three days of the meeting.
   3. The minutes shall include a statement by the ready-mix concrete supplier stating that the proposed concrete mix designs will produce the concrete quality required by these specifications.
   4. The minutes shall include a statement by the concrete contractor that the proposed concrete mix designs will provide appropriate workability and setting times, to ensure that the concrete contractor can achieve the requirements of this specification.

PART 2 - PRODUCTS

2.01 MATERIALS

A. Concrete materials:
   1. Portland Cement: ASTM C150/C150M, Type I/II, or ASTM C-595, Type IL (Portland Limestone Cement). Use one brand of cement throughout the project.
   Coarse and Fine Aggregates: ASTM C 33. Combined aggregate gradation for slabs on grade and other designated concrete shall be 8% - 18% for large top size aggregates (1½") or 8% - 22% for smaller top size aggregates (1" or ¾") retained on each sieve below the top size and above the No. 100 sieve.
      a. Footings and Piers: Unless indicated otherwise on drawings, footings and piers shall have a maximum aggregate size of 1" (#57 stone), and beams ¾" (#67 stone).
      b. Interior Slab on Ground: Unless indicated otherwise on drawings, interior slab on ground shall have a maximum coarse aggregate size of 1" (#57 stone).
      c. Exterior Slab on Ground: Unless indicated otherwise on drawings, exterior slab on ground shall have a maximum coarse aggregate size of 1" (#57 stone).
   2. Water: complying with ASTM C94.
   3. Air-Entraining Admixture **(Interior Slab on Ground)**: **Air-entraining admixture shall not be used for interior slab on ground concrete work.**
   4. Air-Entraining Admixture **(Exterior Slab on Ground Concrete)**: ASTM C-260. Admixture manufacturer shall provide written certification that the air-entraining admixture is compatible with other required admixtures. All exterior slab on ground shall be air-entrained (4% - 6%). Acceptable products: Euclid Chemical AEA-92 or Air 40; Master Builders Micro Air; W.R. Grace Daravair or Darex.
   5. Water-Reducing Admixture: ASTM C494, Type A containing not more than 0.05% chloride ions. Acceptable products: Euclid Chemical Eucon series; Master Builders Pozzolith series; W.R. Grace WRDA or Daracem series.
   6. Water-Reducing, Retarding Admixture: ASTM C494, Type D containing not more than 0.05% chloride ions. Acceptable products: Euclid Chemical Retarder 75; Master Builders Pozzolith series or Delvo; W.R. Grace Daratard 17.
   7. High Range Water-Reducing Admixture (Superplasticizer): ASTM C494, Type F or G containing not more than 0.05% chloride ions. Acceptable products: Euclid Chemical Eucon 37; Master Builders Rheobuild 1000; W.R. Grace Daracem-100.
   8. Water-Reducing, Non-Corrosive Accelerating Admixture: ASTM C494, Type C or E containing not more chloride ions than are present in municipal drinking water. The admixture manufacturer must have long-term, non-corrosive test data from an independent testing laboratory (of at least a year's duration) using an acceptable accelerated corrosion test method such as that using electrical potential measures. Acceptable products: Euclid Chemical Accelguard 80/90 or NCA; Master Builders NC534 or Pozzutec 20; W.R. Grace Polarset.
   9. Prohibited admixtures:
      a. Calcium chloride or admixtures containing more than 0.05% chloride ions are not permitted.
      b. Fly ash is only permitted in exterior slab on ground subject to Alkali Silica Reactivity (ASR); up to 20% exchange by weight.
   10. Macro-Synthetic fibers **(Exterior Slab on Ground Concrete)**: Comply with ASTM C1116. "Structural" fibers shall be a patented coarse monofilament, self-fibrillating, polypropylene/polyethylene fiber with a minimum tensile strength of 73ksi and minimum length of 2 inches.
      a. Acceptable macro-synthetic fiber (No Substitutions): "Tuf-Strand SF" by Euclid Chemical. Phil Brandt 877-438-3826 / pbrandt@euclidchemical.com

B. Related Materials:
   1. Evaporation Retarder: Waterborne, monomolecular film forming, manufactured for application to fresh concrete.
      a. Acceptable manufacturer: "Eucobar" by Euclid Chemical.
   2. Interior Slab on Ground Curing: ASTM C309 with a maximum VOC content of 350g/l. The interior slab on ground shall be cured using a reduced odor, dissipating or removable liquid membrane forming curing compound.
      a. Acceptable manufacturer: "Kurez DR VOX" or "Kurez DR 100" by Euclid Chemical.
      b. Interior Slab on Ground: Unless indicated otherwise on drawings, interior slab on ground shall have a maximum coarse aggregate size of 1" (#57 stone).
      c. Exterior Slab on Ground: Unless indicated otherwise on drawings, exterior slab on ground shall have a maximum coarse aggregate size of 1" (#57 stone).
   3. Interior Slab on Ground Semi-Rigid Polyurea Joint Filler: Comply with ACI 302, shall be a two (2) component, 100% solids, UV Resistant compound, with minimum shore "A" hardness of 80. Color to match adjacent concrete surfaces.
      a. Acceptable manufacturer: "QWIKjoint UVR" by Euclid Chemical.
   4. Interior Slab on Ground Liquid Densifier/Sealer: Sodium siliconate containing at least 24% solids by weight.
      a. Acceptable manufacturer: "Euco Diamond Hard" by Euclid Chemical.
      b. Project service: General Contractor shall contact the Manufacturer prior to bidding for pricing and application requirements, and at least 10 days prior to application of liquid densifier and sealer, for jobsite service. If necessary, the representative will be on site during the first application of liquid densifier/sealer.
   5. Exterior Slab on Ground Curing: ASTM C1315 with a maximum VOC content of 700 g/l. All exterior slab on ground shall be cured using a liquid membrane-forming curing compound.
      a. Acceptable manufacturer: "Super Rez Seal" or "Super Diamond Clear VOX" by Euclid Chemical.
   6. Exterior Slab on Ground Urethane Joint Sealant: ASTM C920-86, Type S, Grade NS, and Class 25 Industrial gun grade polyurethane sealant shall exhibit a shore "A" hardness of 40 and an elongation of 250%.
      a. Acceptable manufacturer: "Eucolastic 1 NS/SL" by Euclid Chemical.

2.02 CONCRETE MIXES

A. Comply with ACI 301 requirements for concrete mixes. Concrete mixes shall be proportioned according to ACI 301, for normal-weight concrete determined by either laboratory trial mix or field test data.

B. Compressive strength:
   1. Interior Slab on Ground: 4000 psi @ 28 days, with a maximum water/cement ratio of 0.53, unless otherwise indicated on the drawings.
   2. Exterior Slab on Ground: 4000 psi @ 28 days, with a maximum water/cement ratio of 0.45, unless otherwise indicated on the drawings.
   3. Concrete materials included in the mix design shall be the same materials provided to the project and shall be prepared by an independent testing laboratory approved by the Owner. Per ACI requirements, if sufficient backup data is not available, the laboratory mix shall exceed the desired job strength of concrete by 1,200 psi.

C. Slump: Concrete shall have a maximum slump of 5½" for the interior and exterior slabs on ground. Unless indicated on drawings, all other concrete shall not exceed a 4" slump.

D. Macro-synthetic fiber addition: All exterior slab on ground shall contain the specified macro-synthetic fiber used at a rate of no less than 3.0 lbs./cyd. Actual fiber dosage may vary based on job-site conditions and shall be calculated by strength equivalency to conventional reinforcement requirements. Required information may include, but not be limited to site prep, subbase, and concrete properties, curing, and loading conditions. The "Engineer of Record" shall contact Euclid Chemical to discuss actual project conditions and the resultant required fiber dosage rate. Fibers may be added at plant location or jobsite and shall be mixed in concrete for a minimum of 4 minutes. Euclid Contact: Mike Mahoney: 216-692-8301

E. Adjustment to Concrete Mixes: Mix adjustments may be requested by the general contractor when characteristics of materials, job conditions, weather, test results or other circumstances warrant; at no additional cost to the Owner and as accepted by the Owner. Laboratory test data for revised mix and strength results must be submitted to and accepted by the Owner prior to work. Testing Agency and Concrete Contractor shall verify that the concrete mix design will produce concrete that will meet the specifications for this project. In addition, the General Contractor and Concrete Contractor shall verify that the workability, finishability and setting times are appropriate for concrete installations. Placement shall be made by concrete truck chute. If concrete pumping is required, the proportions established above shall not be altered to suit the capabilities of the pumping equipment. For concrete containing macro-synthetic fibers, additional water reducer may be necessary. The addition of water is not permitted into concrete mixture after the addition of macro-synthetic fibers.

F. **Interior Slab on Ground Concrete:** Concrete shall be designed to meet 4000 psi compressive strength @ 28 days and exhibit ≤0.04% shrinkage @ 28 days. The mix shall contain approximately 12 cubic feet of 1" top size aggregate (#57 stone), the specified water reducing admixture, and achieve a w/cm ratio of 0.53 (max.). Air-entrainment is prohibited. Proposed mix design shall be similar to the following:

Interior Slab on Ground Prototype mix:

a.	**Materials**	**Prototype mix**
b.	**Cement**	**517-564 lbs.**
c.	**Fly ash/slag**	**Prohibited**
d.	**Coarse aggregate**	**12 cubic feet +/- .50 (#57 stone)**
e.	**Fine aggregate**	**7 cubic feet +/- (adjust as necessary)**
f.	**Water content**	**274 - 298 lbs. (or less)**
g.	**Air content (Entrapped Air Only)**	**3.0% (max.)**
h.	**Water Reducer (Type A/F)**	**3oz.-10oz./100wt +/- (mid-Range)**
i.	**W/CM Ratio**	**0.53 (max.)**
j.	**Initial slump (water)**	**3"**
k.	**Final slump (with water reducer)**	**5.5" (max.)**
l.	**Maximum Shrinkage**	**≤ 0.04% @ 28 days**

G. **Exterior Slab on Ground Concrete:** Concrete shall be designed to meet 4000 psi compressive strength @ 28 days and exhibit ≤0.04% shrinkage @ 28 days. The mix shall contain approximately 12 cubic feet of 1" top size aggregate (#57 stone), the specified water reducing admixture and achieve a w/cm ratio of 0.45 (max.). Air-entrainment shall be as specified. Proposed mix design shall be similar to the following:

Exterior Slab on Ground Prototype mix:

a.	**Materials**	**Prototype mix**
b.	**Cement**	**517-564 lbs.**
c.	**Fly ash/slag**	**Prohibited, Except in areas of known Alkali Silica Reactivity (Up to 20% by weight exchange)**
d.	**Coarse aggregate**	**12 cubic feet +/- .50 (#57 stone)**
e.	**Fine aggregate**	**7 cubic feet +/- (adjust as necessary)**
f.	**Water content**	**232-253 lbs. (or less)**
g.	**Air content (Entrained Air)**	**6.0% (max.)**
h.	**Water Reducer (Type A/F)**	**3oz.-10oz./100wt +/- (Mid-Range)**
i.	**W/CM Ratio**	**0.45 (max.)**
j.	**Initial slump (water)**	**3"**
k.	**Final slump (with water reducer)**	**5.5" (max.)**
l.	**Macro Synthetic Fiber (Tuf-Strand SF)**	**3 lbs / cubic yard (min.)**
m.	**Maximum Shrinkage**	**≤ 0.04% @ 28 days**

PART 3 - EXECUTION

3.01 INSTALLATION (GENERAL)

A. Base Material: Local state department of transportation approved road base material with 100 percent passing the 1.5" (38 mm) sieve, 15 percent to 55 percent passing the No. 4 (4.75 mm) sieve, and less than 12 percent passing the No. 200 sieve). Install "crusher run" base type material to the minimum compacted thickness as indicated on the construction documents. Crushed stone shall be compacted to 98% Modified Proctor density in accordance with ASTM D1557. The in-place density shall be tested for compliance no more than 48 hours prior to concrete placement using ASTM D1556, ASTM D2167, or ASTM D2922. One copy of test results shall be forwarded to the Owner.

B. Formwork: Design, construct, erect, shore, brace, and maintain formwork according to ACI 301.
   1. Form Work: Form all slabs, stairs and other formed concrete with metal forms or ¾" plywood. For exposed surfaces use forms with an undamaged face. Form ties used shall be snap ties. Concrete release agent shall be a VOC compliant, light viscosity, non-staining oil.

C. Vapor Retarder: ASTM E1643 (if indicated on drawings): Install, protect, and repair vapor-retarder sheets; place sheets in position with longest dimension parallel with direction of pour.
   1. Plastic vapor retarder for concrete floor slab shall be 10-mil (minimum) polyethylene. Seal vapor retarder completely around all pipes and conduits. Inspect vapor retarder thoroughly and repair all punctures and tears immediately prior to placing concrete. All laps shall be 18" minimum and sealed with a completely continuous pressure sensitive tape.

D. Steel Reinforcement (if indicated on drawings): Comply with CRSI's "Manual of Standard Practice" for fabricating, placing, and supporting reinforcement.
   a. Do not cut or puncture vapor retarder. Repair damage and reseal vapor retarder before placing concrete.
   b. Install all anchors, ties, chairs, and other supports as per ACI 301/302 requirements, to ensure reinforcing is supported at proper locations. All reinforcing shall be wired in place using #16 annealed wire. Wood or clay brick chairs are not acceptable.
   c. Welded wire fabric mesh (if indicated on drawings) shall be lapped a minimum of 6" at side laps and secured with tie wires no more than 4 feet on center.

3.02 CONCRETE PLACEMENT

A. Carbon Monoxide / Carbon Dioxide Exposure: If the building is enclosed and the interior slab on ground is placed last, general contractor shall be responsible for monitoring interior slab on ground exposure to excessive exhaust gases containing carbon dioxide (CO_2) or carbon monoxide (CO). To minimize potential damage to the interior slab on ground during placement and curing periods, maximum CO_2 levels shall be 4,500 parts per million and maximum CO levels shall be 15 parts per million at concrete surface within 5 feet of any source of exhaust gases. Unvented combustion heaters shall not be in operation during concrete placement, and equipment inside the building during concrete placement shall be limited to the equipment necessary to place and finish concrete. Only one concrete truck shall be in the building at any given time, and under no circumstance shall there be any earth moving equipment, dump trucks, grading equipment, or any other motorized equipment in operation until after the interior slab on ground is placed and protected by specified curing method. Carbon Monoxide and Carbon Dioxide shall be checked using an appropriate meter from a company similar to the following: CEA Instruments, Inc., Phone (201-967-5660); website: HYPERLINK "http://www.ceainstr.com" www.ceainstr.com.

B. Comply with requirements in ACI 301 for measuring, mixing, transporting, and placing concrete.
   1. Cooperate with all other trades. Confer with electrical, mechanical, plumbing, carpenters, steel workers, etc. Make sure that all sleeves, anchor, insert, conduit, floor boxes, pipes, fittings, and other items are installed before placing concrete. Make provisions for door saddles, and thresholds.
   2. General Contractor shall ensure the accuracy, placement, and alignment of all under-slab work. The placement of all boxes shall be square, level, and true in all respects.
   3. Concrete shall be mixed and delivered in accordance with the requirements of ASTM C94.

C. Comply with ACI 305, "Hot Weather Concrete," and ACI 306, "Cold Weather Concrete" for protection during placing, finishing, and curing.

D. Form-Release Agent: Coat all removable wood and metal forming with a VOC compliant, non-staining, concrete form-release agent and allow excess liquid to drain off before forms are placed.

E. Transport: Place at point of use and consolidate with a concrete vibrator. Do not allow concrete to segregate. Maximum free fall for concrete is 3 feet. A vibrator is required for placement of concrete in walls, piers, footings, and turndowns.

F. Concrete Placement: Place on firm, undisturbed earth, or properly compacted fill. Consolidate by vibrating without segregation. Do not place concrete when temperature is 40°F and falling or when freezing weather is predicted within 24 hours.
   1. Place concrete within the minimum temperature range as specified in ACI 301.
   2. Protect concrete as required in ACI 301.
   3. Concrete shall not contain Type III, high early strength cement, calcium chloride, corrosive accelerators, or antifreeze.
   4. Concrete shall be placed before initial set occurs, and in no event after it has contained its water content for more than 1½ hours.
   5. Unless otherwise specified, all concrete shall be placed upon clean, damp, smooth surfaces that are free from running water. Subgrade and base shall be properly consolidated and rut-free.
   6. Concrete shall not be placed upon soft mud or dry porous earth. The concrete shall be consolidated and worked, in an approved manner, into all corners and angles of the forms and around reinforcement and embedded fixtures in such a manner as to prevent segregation of the coarse aggregate as required in ACI 301.

G. During concrete placement, carefully protect all masonry and metal building walls by covering with waterproof paper.

H. Water may be added in accordance with ASTM C94. Water shall only be added at the job site under the direct supervision of a representative from the Testing Agency. Do not add more water than is indicated as allowable on the batch ticket. Water added at the job site shall be documented on the batch ticket.

3.03 FORMED SURFACE FINISHES

A. Rough-Formed Finish: As-cast concrete texture imparted by form-facing material with tie holes and defective areas repaired and patched, and fins and other projections exceeding ¼" in height shall be rubbed down or chipped off.
   1. Apply to concrete surfaces not exposed to public view.

B. Smooth-Formed Finish: As-cast concrete texture imparted by form-facing material, arranged in an orderly and symmetrical manner with a minimum of seams. Repair and patch tie holes and defective areas. Completely remove fins and other projections. All exposed concrete walls are to be grouted and hand rubbed.
   1. Apply to concrete surfaces exposed to public view or to be covered with a coating or covering material applied directly to concrete, such as waterproofing, damp-proofing, veneer plaster, or painting.
   2. Do not apply rubbed finish to smooth-formed finish.
   3. Apply smooth-rubbed finish, defined in ACI 301, to smooth-formed finished concrete.

C. Related Unformed Surfaces: At tops of walls, horizontal offsets, and similar unformed surfaces adjacent to formed surfaces, strike off smooth and finish with a texture matching adjacent formed surfaces. Continue final surface treatment of formed surfaces uniformly across adjacent unformed surfaces, unless otherwise indicated.

3.04 CONCRETE FINISHES AND TOLERANCES

A. General: Unless otherwise noted by Owner, interior slab on ground shall be cast in one continuous placement. Concrete shall be placed, screeded, re-straightened, and finished to meet the specified F_F and F_L tolerance requirements. Interior slab on ground machine trowel finish shall be achieved within a 2" tolerance of all walls, columns, and partitions. Do not wet concrete surfaces while finishing concrete.
   1. Laser screeds (required), vibratory screeds, highway straightedges and wood or resinous bull floats shall be used to initiate screeding and floating process to form a uniform and open-textured surface plane before excess moisture or bleed water appears on the surface. A back-up laser screed is required during concrete placement of the interior slab on ground. Remove excess water before starting floating operations. Do not further disturb surfaces before starting finishing operations.Highway straightedge operations shall continue before, during, and after troweling operation, until the minimum specified floor tolerances are achieved.
   2. Highway straightedge operations shall continue before, during, and after troweling operation, until the minimum specified floor tolerances are achieved.
   3. Trowel finish (Interior Slab on Ground): Trowel surfaces with trowel machines equipped with adjustable blades. Trowel the surface sufficiently to produce a smooth, tight, abrasion resistant surface. Care shall be taken not to overwork or burn the surface. Use 6" wide finish style steel-reinforced blades on final passes. Finishing blades shall be in new condition and completely clean of any deleterious materials.
   4. Trowel finish (Other Floor Areas): Apply a hard trowel finish to surfaces indicated and to floor and slab surfaces exposed to view or to be covered with resilient flooring, carpet, ceramic, or quarry tile set over a cleavage membrane, paint, or another thin film-finish coating system.
   5. Heavy broom finish: Side yard, main entry and exit vestibules, cart storage, ramps, aprons, and walks shall receive a heavy broom finish.
   6. Protection: Care shall be taken to protect newly placed concrete. Entrances shall include clean floor mats to prevent mud stains and all equipment on the floor shall be diapered to prevent spills. Cutting oils are not allowed on the interior slab on ground at any time during the construction process.

B. Pet Wash Area:
   1. Concrete Finish and Curing: Do not broom finish this area. Place and finish concrete as specified in paragraph A, "General Finishes," Section 3.04, "Concrete Finishes and Tolerances." After final troweling, cure using "Kurez DR VOX" or "Kurez DR 100" at an application rate of 400sf/gallon.
   2. Joint Filling: Fill all control joints as specified in paragraph B, Section 3.07, "Interior Slab on Ground Joint Filler."
   3. Surface Preparation: Epoxy floor coating system is designed for application on concrete substrates. Newly placed concrete surfaces should be cured for a minimum of 28 days prior to coating. Concrete surfaces must be structurally sound, free of loose or deteriorated concrete and free of dust, dirt, paint, efflorescence, oil, and other contaminants. Mechanically abrade the surface to achieve a surface profile equal to CSP 2-3 in accordance with ICRI Guideline 310.2. Properly clean profiled area. The pH of the surface should be checked according to ASTM D 4262. Following surface preparation, the cleaned surface should have a minimum surface-tensile strength of 200 psi when tested with an Elcometer or similar pull tester (ASTM D 4541).
   4. Products:
      a. Initial Coat: "Increte High Performance Epoxy" 1-gallon kit (Gray Color) by Euclid Chemical.
      b. Pigmented Chips: "Increte Granite Coat Chips" (Mica Color) by Euclid Chemical.
      c. Grout Coat: "Increte High Performance Epoxy" 1-gallon kit (Clear Color) by Euclid Chemical.
      d. Final Wear Coat: "Increte Polyseal Polyaspartic" 2-gallon kit (Clear Color) by Euclid Chemical.
   5. Initial Coat Mixing: Pre-mix Increte High Performance Epoxy (Gray) Part A and Part B, then combine 2 parts by volume of Part A with one part by volume of Part B, and then mix thoroughly using a low-speed drill motor and a "Jiffy" type mixer. Mix only the amount of material that can be applied during the pot life. Do not aerate the mix.
   6. Initial Coat Application: Apply Increte High Performance Epoxy (Gray) at 120sf/gallon. Spread the mixed epoxy with a notched squeegee while wearing spiked shoes. Start from one end of the floor and work backwards and sideways trying to keep a wet-to-wet edge. Roll coating in one direction using a 3/8" nap, shed-resistant roller. Make sure the material is applied as quickly as possible without leaving puddles.
   7. Pigmented Chip Application: Broadcast until refusal, Increte Granite Coat Chips (Mica) in a high arcing motion into the wet epoxy. Allow to cure. Once dry, vacuum / scrape off excess flakes.
   8. Grout Coat: Apply Increte High Performance Epoxy (Clear) at 120sf/gallon. Allow to dry.
   9. Wear Coat: Apply a final coat of Increte Polyseal Polyaspartic (Clear) at 120sf/gallon. Allow to dry.
   10. Cove Base: In addition to the seamless integral floor, provide a 4" cove base from the floor to the "FRP" wall transition. Cove base shall consist of a mixture of Increte High Performance Epoxy and finely graded, clean dry, trowelable aggregates, troweled to the previously installed vertical cement board surface, to a height of 4". Create a coved, seamless, integral transition at joint between wall and floor. Broadcast until refusal, Increte Granite Coat Chips (Mica) into the wet epoxy. Finish Cove Base detail with the Grout Coat and Wear Coat as specified herein. Once completed, the floor and cove base shall be seamless in function and appearance.
      a. Install cement wall board so that the bottom edge is flush with the floor as specified.
      b. Install cement wall board tape, similar to Goldblatt Professional Cement Board Tape, to all joints of cement board.
      c. Install Fiber Reinforced Panels (FRP) as required. Do not apply adhesive to any areas contacting the 4" cove base installation. Do not apply water to any of these surfaces prior to installation of the epoxy floor or cove system.
      d. Install 4" cove base directly to cement board. Cove base shall come in direct contact with the bottom edge of the Fiber Reinforced Panels so that the floor and cove base shall be seamless in function and appearance.

C. Tolerances: ACI 117, "Specifications for Tolerances for Concrete Construction & Materials." General contractor is responsible for all costs associated with floor tolerance testing. A copy of the final floor tolerance report shall be provided by the general contractor to Owner within 24 hours of receiving the report from the testing laboratory.
   1. All perimeter areas and edges of the interior floor shall exhibit the same final finish.

a.	Location	Interior Slab on Ground	Exterior Slab on Ground
b.	F_F Tolerance	35	25
c.	F_L Tolerance	20	17

3.05 CAST-IN-PLACE CONCRETE JOINTS

A. General: Joints shall be cut as indicated on drawings, and as soon as the slab will support the weight of the saw and operator and when cutting action will not tear, abrade, or otherwise damage the concrete surface. Cuts must be made before concrete develops random contraction cracks. Employ sufficient number of saws and workers to complete cutting of saw joints within 2 hours after final finish of interior slab on ground. After saw cutting, immediately vacuum up and remove all residues completely.
   1. Construction Joints:
      a. Construction joints shall be true to line with faces perpendicular to surface plane of concrete (refer to drawings), so as not to impair strength or appearance of concrete.
      b. Construction joints in slab on grade shall be butt joints with square plate dowels. Do not use metal keyways.
   2. Control Joints: Form weakened-plane control joints, sectioning concrete into areas as indicated:
      a. All saw cutting shall be accomplished with a "Soff-Cut" saw, by Husqvarna Construction Products (800-288-5040), equipped with a patented color-coded, diamond blade and skid plate in new condition. Concrete Subcontractor must have documented successful experience in the use of this method prior to this project. Using a 1/8" thick blade, cut the interior slab on ground a minimum of 1.25" deep for 4" thick slabs and 1.67" for 5" thick slabs. White chalk lines and concrete dust shall be removed completely and immediately after cutting operation.
      b. Random depth checks shall be performed by an independent testing company to confirm that the specified depth of cut is made. Any cut(s) found to be less than proper depth shall be re-cut to the proper depth and filled with specified joint filler at the general contractor's expense.
   3. Isolation Joints: Install joint-filler strips at junctions with slabs-on-grade and vertical surfaces, such as column pedestals, foundation walls, grade beams, and other locations, as indicated.
      a. Extend joint fillers full width and depth of joint, terminating flush with finished concrete surface, unless otherwise indicated.

3.06 INTERIOR SLAB ON GROUND PROTECTION AND CURING

A. Protection: Protect freshly placed concrete from premature drying and excessive cold or hot temperatures. Comply with ACI 305 for hot-weather protection and ACI 306 for cold-weather protection during placing and curing. For concrete placement during hot, dry, and windy conditions, General Contractor shall use the specified evaporation retarder as per manufacturer instructions to maintain a moist condition and to minimize plastic drying shrinkage cracking.

B. **Interior Slab on Ground Concrete Curing**: The interior slab on ground shall be cured using the specified dissipating liquid membrane-forming curing compound. All applications shall be made by a trained applicator immediately following final finish. The concrete and air temperature shall be above 50ºF. Surface shall be damp, but not wet and can no longer be marred by walking workmen. Apply "Kurez DR VOX" or "Kurez DR 100" at an application rate of 400sf/gallon.

C. **Interior Slab on Ground Protection**: Take the following measures to protect the interior slab on ground:
   1. Wrap or diaper all motorized and hydraulic equipment to prevent fluid leaks
   2. Provide non-marking tires on rubber-tired vehicles or equip rubber tires with tire boots made of nylon fabric
   3. Provide mats at all entrances to prevent mud stains

D. **Exterior Slab on Ground Concrete Curing**: All exterior slab on ground shall be cured using the specified liquid membrane-forming curing compound. Application shall be made by a trained applicator immediately following final finish. Concrete and air temperature shall be above 50ºF. Surface shall be clean and damp, but not wet and can no longer be marred by walking workmen. Apply "Super Rez Seal" or "Super Diamond Clear VOX" at an application rate of 400sf/gallon.

3.07 INTERIOR SLAB ON GROUND JOINT FILLER

A. General: Do not commence installation of semi-rigid polyurea joint filler, liquid densifier / sealer and polishing processes until the building is completely enclosed, permanent power and lighting is operating, and the building is thermostatically controlled. Installation of these materials shall commence approximately two weeks prior to "fixture date."

B. Joint Filler Installation: Comply with ACI 302 as applicable to materials, applications, and conditions.
   1. Surface cleaning of joints: Clean joints immediately before installing joint filler. Remove foreign material that could interfere with adhesion of joint filler by brushing, grinding, blast cleaning, mechanical abrading, or a combination of these methods to produce a clean, sound substrate capable of developing optimum bond with joint filler. Remove loose particles remaining from above cleaning operations by vacuuming or blowing out joints with oil-free compressed air. Also remove all laitance and form-release agents from concrete surface. Clean nonporous surfaces with chemical cleaners or other means that do not stain, harm substrates, or leave residues could interfere with adhesion of joint sealants. All surfaces to be filled shall be clean and dry.
   2. Mixing: Joint filler is a two-part product requiring machine mixing and placing. Premix Part "B" separately before using. Follow pump manufacturer's equipment instructions.
   3. Placement: For proper load transfer, joints must be filled full depth, but in no case should the joint filler be any less than 1" deep in the joint. No backer rod is allowed. Joints should be overfilled and shaved level with the surface, giving the floor joints a flat, smooth appearance.
   4. Joint filler separation: The trained joint filling applicator shall include in their bid a cost per linear foot to make one return trip to refill joints if joint filler sidewall separation or splitting exceeds 1/16", or if surface profile is concave, chattered or if voids occur. This shall take place one week prior to grand opening, or at Owner's request.

C. Initial cleaning for liquid densifier and sealer application: thoroughly clean the interior slab on ground prior to the initial application of liquid densifier/sealer and polishing process. Completely remove the remnants of the specified dissipating or removable curing compound from the floor surface. The following floor stripper or removal solution shall be applied to the floor at the proper ratio to thoroughly strip, clean and remove all curing compound residue:
   a. "Euco Clean & Strip" by Euclid chemical

D. Polishing process and application of liquid densifier / sealer: prior to application, inspect interior slab on ground to ensure that slab is clean and free of dust, grease, oils, or other contaminants that might prohibit the proper application and penetration of the liquid densifier and sealer.
   1. The following process is provided as a guide. Many factors, including, but not limited to interior slab on ground finish, hardness and flatness will determine the initial diamond tooling, including additional grinding and/or polishing operations required to meet the requirements specified herein. The trained applicator shall provide a test polish, including application of liquid densifier/sealer to a designated area of the interior slab on ground, using the same equipment, tools and methods as will be used to polish the interior slab on ground. Floor polishing and application of liquid densifier/sealer shall not commence until general contractor has accepted the polished interior slab on ground test slab.
   2. Step one: using equipment with sufficient head pressure (≥ 150 psi), thoroughly clean, and then grind concrete floor with a combo set of 60 grit resin bond diamonds and 100 grit resin bond diamonds (not pads). Each pass must overlap 50% of the previous pass. Grind the concrete floor to allow for an even scratch pattern. Clean floor thoroughly after this pass.
   3. Step two: apply Euclid diamond hard liquid densifier/sealer at 225 square feet per gallon.
   4. Step three: using equipment with sufficient head pressure (≥ 150 psi) polish concrete floor with a combo set of 100 grit resin bond diamonds and 200 grit resin bond diamonds (not pads). Each pass must overlap 50% of the previous pass. Polish the concrete floor to allow for an even scratch pattern. Clean floor thoroughly after this pass.
   5. Step four: using equipment with sufficient head pressure (≥ 150 psi) polish concrete floor with 400 grit resin bond diamonds (not pads). Each pass must overlap 50% of the previous pass. Polish the concrete floor to allow for an even scratch pattern. Clean floor thoroughly after this pass.
   6. Step five: apply Euclid diamond hard liquid densifier/sealer at 700 square feet per gallon.
   7. Step six: burnish/polish concrete floor with 800 grit diamond impregnated pads
   8. Step seven: burnish/polish concrete floor with 1500 grit diamond impregnated pads
   9. Polish results: perform polishing process to reach a specified overall gloss value (SOGV) of ≥35 as measured with a HORIBA ig-320, and a specified minimum gloss reading (SMGV) of ≥30. The trained applicator shall take four gloss measurement readings at 90° from each other, and then averaged for one reading at each location. A minimum of 25 readings shall be taken throughout the interior slab on ground. The overall measurement shall be reported to general contractor within 24 hours of the polishing process. Gloss shall be considered a quantitative value that expresses the degree of reflection when light hits the concrete floor surface. Gloss measurements will be taken independent of ambient lighting and will be taken within a sealed measurement window located beneath the test unit.

3.08 URETHANE EXPANSION JOINT SEALANT APPLICATION

A. Urethane Joint Sealant Application:
   1. Apply joint sealants in accordance with manufacturer's written instructions.
   2. Back-up material:
      a. Install appropriate size backer rod, larger than the joint where necessary per manufacturer's recommendations and in a manner to provide concave sealant profile.
      b. Where joint depth does not permit installation of backer rod, install adhesive-backed polyethylene bond-breaker tape along the entire back of joint to prevent 3-sided adhesion of joint sealant.
   3. Sealant: Verify that the temperature and moisture conditions are within manufacturer's acceptable limits. Using fresh sealant and equipment that is in proper working order, completely fill joint with sealant, filling from bottom up to avoid entrapping air.
   4. Using clean, dry tool with rounded edge and of appropriate width for each joint, tool freshly installed sealant to provide preferred concave profile, to ensure intimate contact between sealant and substrate and to provide neat appearance. Where surface aggregate does not permit proper tooling, install sealant and backer rod so that face of joint is recessed behind exposed aggregate and sealant is bonded to firm, even surface. Use dry tooling method. Do not use tooling agents such as soapy water or tooling agents that have not been approved by sealant manufacturer.

UNLESS OTHERWISE NOTED BY TSC, CONCRETE FLOOR SLAB SHALL BE CAST AS ONE CONTINUOUS POUR. CONTRACTOR SHALL PROVIDE TERMITE PROTECTION. APPLY TERMITICIDE TO SUB-BASE BEFORE CONCRETE IS POURED. PROVIDE ONE GALLON OF DILUTED TERMITICIDE PER 10 SQUARE FEET OF SLAB AREA. APPLY AN ADDITIONAL 2-4 GALLONS PER 10 LINEAR FEET AT THE FOUNDATION PERIMETER.

NOTE: THIS SPEC IS WRITTEN AROUND ASTM STANDARDS. GENERAL CONTRACTOR AND DEVELOPER SHALL BE RESPONSIBLE FOR OVERALL QUALITY OF PRODUCTS SELECTED AND WORKMANSHIP OF SLAB.

ARCHITECT AND CONTRACTOR TO PAY SPECIAL ATTENTION TO ACHIEVE DESIGN THAT PREVENTS THE CONCRETE FROM HEAVING AT ALL DOORWAYS ESPECIALLY IN COLD WEATHER LOCATIONS.

OXFORD ARCHITECTURE

2934 Sidco Drive
Suite 120
Nashville, TN 37204

Architecture
Planning
Interior Architecture

bennett&pless
formerly WiSEngineers
Experience Structural Expertise
Atlanta, Boca Raton, Charlotte, Chattanooga, Knoxville, Nashville, Orlando, Raleigh
1964 - 2024 **Celebrating** 60 **Years of Structural Excellence**
565 Marriott Drive, Suite 300
Nashville, Tennessee 37214
Tel 615 782 0100

Copyright 2024 • **Bennett & Pless, Inc.**
All Rights Reserved

B & P Job Number 24.02.117

TRACTOR SUPPLY COMPANY

BOUTTE
LOUISIANA

This drawing and the design shown is the property of the architect. The reproduction, copying or use of this drawing without their written consent is prohibited and any infringement will be subject to legal action

Job Number: ??

Date: 07.18.2024

Revisions: △

Revisions: △

Revisions: △

CONCRETE SPECIFICATIONS

Sheet Number: S5.4

CONSTRUCTION NOTES

1. FURNISH AND INSTALL CONCENTRIC DIFFUSER AND PLENUM WITH 18"x34" SUPPLY AND RETURN CONNECTIONS BY RUSKIN ROOFTOP SYSTEMS MODEL 01-530-50 OR APPROVED EQUAL. REFER TO SHEET M2.0 "CONCENTRIC DIFFUSER DETAIL".
2. FURNISH AND INSTALL 2'x2' ADJUSTABLE MODULATING SUPPLY AIR DEVICE, THERMA-FUSER BY ACUTHERM, MODEL TF-HC-8 WITH 8"ø COLLAR. SET AT 72°F HEATING AND COOLING AND 165 CFM MAX FLOW. FURNISH COMPLETE WITH INSULATED BACKING AND 10% ADJUSTABLE SCREW FLOW STOP.
3. FURNISH AND INSTALL VAV DAMPER BY ZONEX, MODEL STMPD10, WITH SAMOD THERMOSTAT, TR-1 24V TRANSFORMER, AND TS-1 DUCT TEMPERATURE SENSOR. BALANCE SUPPLY AIRFLOW TO 290 CFM.
4. ROUTE MCD LINE ON ROOF AT ⅛" PER FOOT TOWARD DRAIN. REFER TO DETAIL FOR PIPE SUPPORT INSTALLATION.
5. MOUNT THERMOSTAT 48" A.F.F.
6. MOUNT THERMOSTAT 90" A.F.F. ON POLE FACING AWAY FROM NEAREST DIFFUSER.
7. CONTRACTOR SHALL VERIFY SUPPLY AND RETURN DUCT FROM UNIT FALLS WITHIN CORE AREA WALLS TO DECK.
8. 10"ø RETURN DUCT OPEN TO SPACE. CAP WITH WIRE MESH - PROVIDE MANUAL VOLUME DAMPER IN RETURN AIR DUCT AND BALANCE FOR 290 CFM.
9. MOUNT THERMOSTAT 60" A.F.F.
10. FURNISH AND INSTALL CONCENTRIC DIFFUSER AND PLENUM WITH 18"x28" SUPPLY AND RETURN CONNECTIONS BY RUSKIN ROOFTOP SYSTEMS MODEL 01-530-22 OR APPROVED EQUAL. REFER TO SHEET M2.0 "CONCENTRIC DIFFUSER DETAIL".
11. EXTEND 4" SINGLE WALL POLYPROPYLENE VENT SYSTEM MEETING U.L. 1738 STANDARDS, FOR GAS FLUE AND COMBUSTION AIR INTAKE UP TO CONCENTRIC VENT KIT THRU ROOF. SIZE COMBUSTION AIR AND FLUE PIPING AND INSTALL CONCENTRIC VENT KIT THRU ROOF PER MANUFACTURER'S RECOMMENDATIONS.

MECHANICAL LEGEND

SYMBOL	DESCRIPTION
	NEW SUPPLY AIR DUCTWORK
	NEW RETURN AIR DUCTWORK
	NEW EXHAUST AIR DUCTWORK
	MANUAL VOLUME DAMPER
	CEILING DIFFUSER
	CEILING RETURN AIR GRILLE
	CEILING MOUNTED EXHAUST FAN
B 200 CFM	SUPPLY CFM
A.F.F.	ABOVE FINISHED FLOOR
O.A.	OUTSIDE AIR
—MCD—	MECHANICAL CONDENSATE DRAIN
SD	DUCT MOUNTED SMOKE DETECTOR
EF-1	EQUIPMENT LABEL (SEE MECH. SCHEDULE FOR INFO.)
T	THERMOSTAT
	AIR FLOW
△	UNDERCUT DOOR ¾"

INTERNATIONAL MC 403.3 COMPLIANCE SCHEDULE

UNIT NUMBER	RTU-1, 2, 3, & 4		RTU-5				TOTAL
AREA SERVED	RETAIL SALES	STOCKROOM	EMPLOYEE LOUNGE	OFFICE	CORRIDOR	I.T. CLOSET	
AREA (SQ. FT)	15,416	4,945	246	78	240	58	
NO. PEOPLE/1000 SQ. FT. (TABLE 403.3)	15	N/A	50	5	–	–	
PEOPLE QUANTITY	50***	N/A	10 *	1	–	–	
AIRFLOW PER PERSON (TABLE 403.3)	7.5	N/A	5	5	–	–	
CFM / SQ. FT.	.12	.12	.06	.06	.06	.06	
TOTAL O.A. REQUIRED (CFM)	2,225	NAT. VENTILATION**	65	10	15	5	2,320
WITH VENTILATION EFFICIENCY = .8	2,785	NAT. VENTILATION**	85	15	20	10	2,915
TOTAL O.A. PROVIDED (CFM)	2,785	NAT. VENTILATION**	85	15	20	10	2,915

NOTES:
* MAX. OCCUPANCY IN **EMPLOYEE LOUNGE** FURNISHED BY OWNER.
** OPERABLE OPENING AREAS IN **STOCKROOM** EXCEEDS 4% OF FLOOR SPACE PER IMC SECTION 402.2.
*** MAXIMUM OCCUPANCY BASED ON OWNER FURNISHED DATA

TRACTOR SUPPLY LIGHTING & HEATING SCHEDULE

	PYLON/BUILDING SIGN PARKING LOT LIGHTS	BUILDING LIGHTS WALL PACKS	BUSINESS LIGHTS	EMPLOYEE LIGHTS	HEATING	COOLING	SUNDAY
ON	DUSK (BY PHOTOCELL)	DUSK TO DAWN PHOTOCELL (ALWAYS ON DURING DARK)	7:30 AM	7:30 AM	68 DEGREES AT 8:00 AM	74 DEGREES AT 8:00 AM	SAME TEMPS AT 10:00 AM
OFF	9:15 PM	DURING THE DAY	8:30 PM	8:30 PM	62 DEGREES AT 9:00 PM	80 DEGREES AT 9:00 PM	SAME TEMPS AT 6:00 PM
LIGHTING CONTROL ZONE	LZ-3	LZ-2	LZ-1B	LZ-1A			
NOTES: CONTROL ZONE	THE SYSTEM CAN BE OVERRIDDEN BY THE OVERRIDE SWITCH IN CASE THE STORE IS OPEN EARLIER OR LATER THAN NORMAL STORE HOURS.						
NOTES: CONTRACTOR RESPONSIBILITIES	1. LZ-X DENOTES ROUTING THRU A LIGHTING CONTRACTOR IN THE UNITIZED BOARD. 2. GC RESPONSIBLE FOR PROGRAMMING ALL NON EMS CONTROLLED THERMOSTATS AND LIGHTING CONTROLS. 3. TEMPERATURE SET POINTS SHALL BE COORDINATED WITH OWNER/EMS SYSTEM PROVIDER AT TIME OF INSTALLATION. MAINTAIN MIN. 5 DEGREE DEADBAND BETWEEN HEATING AND COOLING SET POINTS.						

GENERAL NOTES:
- THERMOSTATS SERVING RTU-1, 2, 3, & 4 SHALL BE INTERLOCKED IN ORDER TO PREVENT SIMULTANEOUS HEATING/COOLING.
- REFER TO SHEET E3.1 FOR THERMOSTAT MOUNTING DETAILS.
- RETURN AIR GRILLE FLOW QUANTITIES SHOWN INDICATE 100% AIR FLOW RETURN DURING UNOCCUPIED HOURS OF OPERATION

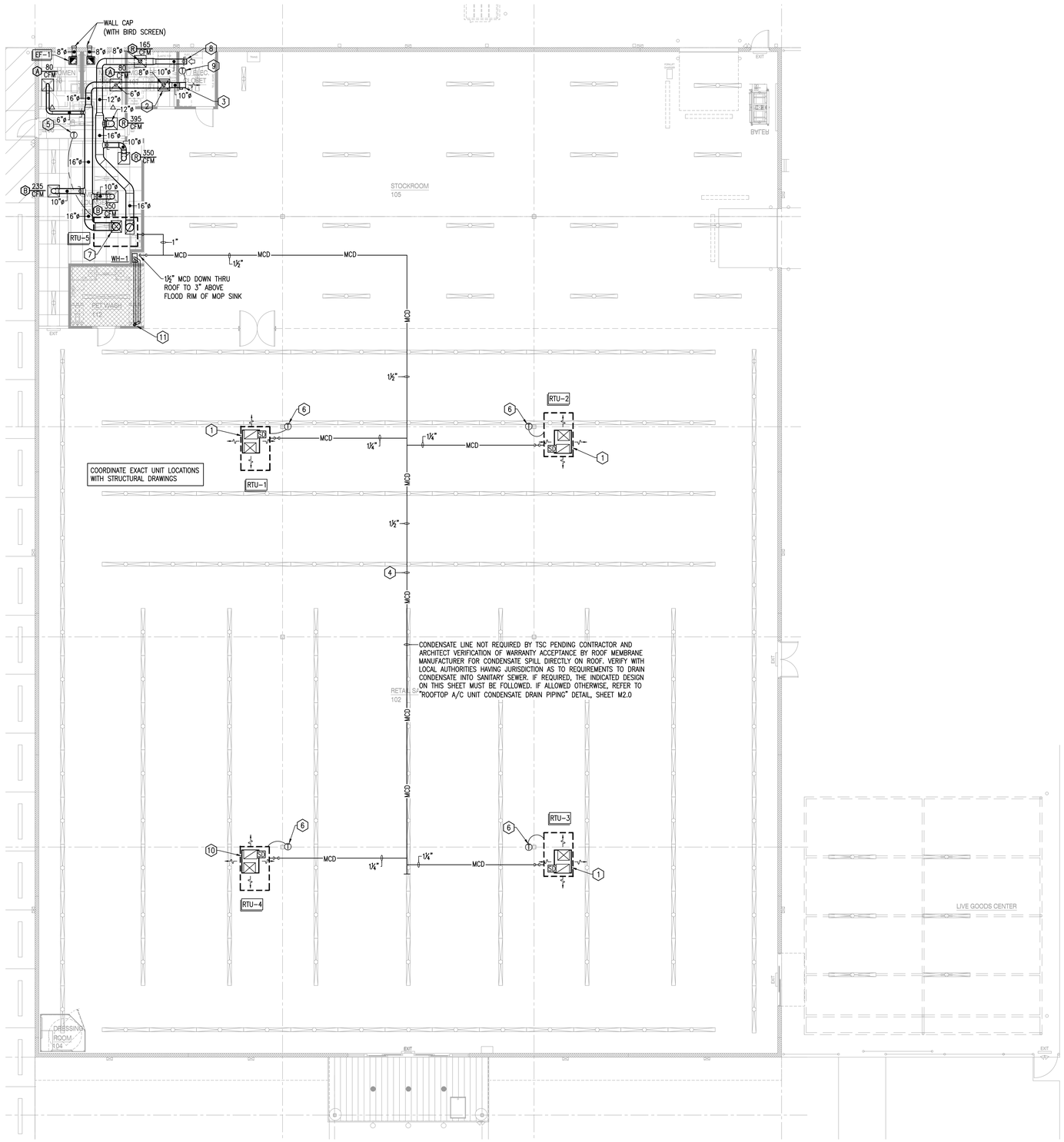

MECHANICAL FLOOR PLAN

SCALE: 1/8" = 1'-0"

OXFORD ARCHITECTURE
2934 Sidco Drive
Suite 120
Nashville, TN 37204
Architecture
Planning
Interior Architecture

Schelton ENGINEERING
1163 West Main St.
Franklin, TN 37064
Tel: 615.730.9111 / Fax: 615.224.3599
gary@scheltonengineering.com
Project #24-077

TSC

TRACTOR SUPPLY COMPANY

BOUTTE, LOUISIANA

Tractor Supply Company shall not be responsible for the payment of any work performed or material supplied by the Contractor or any of its sub-contractors, sub-subcontractors and anyone claiming by through or under any of them which is not identified in writing and signed by one of the following Tractor Supply Company personnel: Vice President Real Estate, Director of Construction, or a Construction Project Manager. No action, conduct, omission, prior failure, or course of dealing by Tractor Supply Company shall act to waive, modify, change or alter the requirement that all work, whether by contract, change order or change directive, must be in writing and signed by the personnel identified in this provision. Any work performed or material provided by the Contractor, any of its sub-contractors, sub-subcontractors contrary to this provision shall be at its own risk and own expense and Tractor Supply Company shall not be obligated to reimburse or pay the Contractor or any of its sub-contractors, sub-subcontractors for same.

All measurements and items portrayed on this sheet are deemed to be accurate by architect, however all bidding General Contractors should field verify the actual conditions. Any changes to the scope of work, and thus potential change orders, should be identified and communicated in your bid submittal to TSC.

This drawing and the design shown is the property of the architect. The reproduction, copying or use of this drawing without their written consent is prohibited and any infringement will be subject to legal action

Job Number: 2428

Date: 07.23.2024

Revisions:

Revisions:

Revisions:

MECHANICAL FLOOR PLAN

Sheet Number: M1.0

HEATING, VENTILATING AND AIR CONDITIONING SPECIFICATIONS

PART 1 GENERAL

1. FURNISH ALL MATERIALS, LABOR, TOOLS, TRANSPORTATION AND INCIDENTALS TO COMPLETE IN EVERY DETAIL, AND LEAVE IN WORKING ORDER ALL ITEMS CALLED FOR HEREIN OR SHOWN ON THE ACCOMPANYING DRAWINGS.

2. IT IS THE RESPONSIBILITY OF CONTRACTOR TO READ ALL SPECIFICATIONS AND CONSULT ALL DRAWINGS WHICH MAY AFFECT THE INSTALLATION AND COORDINATION OF HIS WORK WITH OTHER TRADES. CONTRACTOR SHALL COORDINATE AND MAKE MINOR ADJUSTMENTS IN LOCATION OF EQUIPMENT AND MATERIALS AS NECESSARY TO SECURE COORDINATION.

3. LAYOUT SHOWN IN DRAWINGS IS BASED ON A PARTICULAR MAKE OF EQUIPMENT. CONTRACTOR SHALL PROVIDE SIX SUBMITTAL SETS OF SHOP DRAWINGS TO ENGINEER FOR APPROVAL PRIOR TO STARTING WORK. IF ANOTHER MAKE OF EQUIPMENT IS DESIRED, THESE SUBMITTALS SHALL ALSO SHOW ALL REQUIRED MODIFICATIONS AND CHANGES, INCLUDING THOSE INVOLVING OTHER TRADES, AND COST THEREOF SHALL BE INCLUDED IN HIS BID. REQUESTS FOR SUBSTITUTION OF PRODUCTS NOT SPECIFICALLY NAMED SHALL BE SUBMITTED IN WRITING A MINIMUM OF TEN (10) CALENDAR DAYS PRIOR TO THE BID DATE. REQUESTS SHALL INCLUDE DESCRIPTION OF ITEM(S), NAME OF MANUFACTURER TO BE SUBSTITUTED AND CATALOG DATA. REQUESTS SHALL BE REVIEWED ONLY TO APPROVE OR REJECT SUBMISSION OF PRODUCT. DETAILED SUBMITTALS SHALL BE SUBMITTED AS NOTED IN OTHER PORTIONS OF THIS SPECIFICATION. DO NOT SUBSTITUTE MATERIALS, EQUIPMENT OR METHODS UNLESS SUCH SUBSTITUTION HAS BEEN APPROVED IN WRITING. DO NOT ASSUME THAT MATERIALS, EQUIPMENT OR METHODS WILL BE APPROVED UNTIL SPECIFIC WRITTEN APPROVAL HAS BEEN GIVEN. THE BURDEN OF PROOF FOR REQUESTED SUBSTITUTIONS RESTS WITH THE CONTRACTOR. CONTRACTOR MUST RECEIVE APPROVED SUBMITTAL COPY, SIGNED BY ENGINEER BEFORE PROCEEDING WITH ANY MODIFICATIONS. WORK INSTALLED USING UNAPPROVED SUBSTITUTIONS SHALL BE REPLACED AT NO ADDITIONAL COST TO THE OWNER.

4. CONTRACTOR SHALL VISIT THE SITE AND FULLY INFORM HIMSELF CONCERNING ALL CONDITIONS AFFECTING SCOPE OF WORK. FAILURE TO DO SO SHALL NOT RELIEVE CONTRACTOR OF ANY RESPONSIBILITY IN THE PERFORMANCE OF HIS WORK. ALL WORKMANSHIP SHALL BE OF THE HIGHEST QUALITY IN ACCORDANCE WITH THE BEST PRACTICES OF THE TRADE BY CRAFTSMEN SKILLED IN THIS PARTICULAR WORK. CONTRACTOR SHALL FILE ALL DRAWINGS, PAY ALL FEES AND OBTAIN ALL PERMITS AND CERTIFICATES OF INSPECTION RELATIVE TO THIS WORK.

5. COMPLETED INSTALLATION SHALL CONFORM TO ALL APPLICABLE FEDERAL, STATE AND LOCAL CODES AND ORDINANCES, INCLUDING BUT NOT LIMITED TO THE LATEST APPROVED EDITIONS OF THE FOLLOWING:

   STATE BUILDING CODE, INTERNATIONAL BUILDING CODE, INTERNATIONAL MECHANICAL CODE, INTERNATIONAL ENERGY CONSERVATION CODE NFPA-90A, NFPA-101, NFPA-54.

   ALL EQUIPMENT SHALL BE ARI CERTIFIED AND U.L. LISTED.

6. SYSTEM LAYOUT IS SCHEMATIC AND EXACT LOCATIONS SHALL BE DETERMINED BY STRUCTURAL CONDITIONS, COORDINATION WITH OTHER TRADES, COORDINATION WITH FINISHES AND OTHER CONDITIONS. STRUCTURAL SUPPORTS SHALL NOT BE CUT OR ALTERED TO ASSURE FIT OF HVAC SYSTEM.

7. CONTRACTOR SHALL BE RESPONSIBLE FOR ALL DEFECTS, REPAIRS AND REPLACEMENTS IN MATERIALS AND WORKMANSHIP FOR A PERIOD OF ONE (1) YEAR AFTER FINAL PAYMENT IS APPROVED. CONTRACTOR SHALL HONOR FACTORY WARRANTIES ON ALL EQUIPMENT PROVIDED AS PART OF THIS SYSTEM. COMPRESSORS SHALL BE PROVIDED WITH A MINIMUM OF FIVE (5) YEAR (PARTS ONLY) WARRANTY.

8. UPON COMPLETION OF PROJECT, ALL SYSTEM EQUIPMENT AND MATERIALS SHALL BE IN NEW, CLEAN CONDITION WITH ALL DAMAGE RESTORED TO ACCEPTABLE CONDITION. ALL EQUIPMENT, COMPONENTS AND DUCTWORK SHALL BE INSPECTED AND THOROUGHLY CLEANED, READY FOR USE. AT COMPLETION OF JOB, ALL MISCELLANEOUS TOOLS, SCAFFOLDING, SURPLUS MATERIALS, RUBBISH AND DEBRIS SHALL BE REMOVED BY CONTRACTOR.

9. IF HVAC EQUIPMENT IS USED FOR TEMPORARY HEATING, ETC., THE CONTRACTOR SHALL ASSUME THE RESPONSIBILITY FOR CLEANING FILTERS, COILS, ETC. FINAL PERMANENT CONNECTIONS OF SERVICES TO UNITS SHALL BE COMPLETE PRIOR TO ANY START-UP OF EQUIPMENT.

10. WHERE PIPES, DUCTS, ETC., ARE TO PASS THROUGH WALLS, FLOORS, ETC. SLEEVES SHALL BE PROVIDED PRIOR TO WALL CONSTRUCTION. SLEEVES SHALL BE OF EQUAL OR GREATER GAUGE METAL THAN PIPES OR DUCTS PASSING THROUGH. WHERE SLEEVES PENETRATE EXTERIOR SURFACES, VOIDS SHALL BE SEALED WATER TIGHT. WHERE SLEEVES PASS THROUGH RATED PARTITIONS, SLEEVE PACKING SHALL BE OF U.L. LISTED FIRE SAFE TYPE.

11. CONTRACTOR SHALL SUBMIT THREE SETS (3) OF INSTRUCTION BOOKS, INCLUDING INSTALLATION, OPERATION AND MAINTENANCE INSTRUCTIONS, PAMPHLETS OR BROCHURES AND ALL EQUIPMENT WARRANTIES OBTAINED FROM EACH MANUFACTURER OF EQUIPMENT.

PART 2 PRODUCTS

1. HEATING AND COOLING EQUIPMENT

   A. NEW ROOFTOP UNITS SHALL BE THE YORK PREDATOR/SUNLINE SERIES OR LENNOX "L SERIES" ROOFTOP UNITS WITH ELECTRIC COOLING AND GAS HEATING. THE MECHANICAL CONTRACTOR SHALL CONTACT YORK AT 405-419-6531 OR LENNOX AT 404-403-7083 TO REQUEST PRICING AND TECHNICAL SUPPORT ON THE TRACTOR SUPPLY COMPANY NATIONAL ACCOUNT.

   B. UNIT SHALL BE FACTORY ASSEMBLED, TESTED AND HAVE COMPLETE REFRIGERANT - 410A CHARGE, READY TO OPERATE. ALL TUBING JOINTS SHALL BE BRAZED. COIL SHALL BE MINIMUM OF 3-ROWS DEEP.

   C. FAN SHALL BE STATICALLY AND DYNAMICALLY BALANCED, DOUBLE INLET, FORWARD CURVED BLOWER CAPABLE OF DELIVERING DESIGN CFM. FAN SHALL BE QUIET IN OPERATION AND INTERNALLY VIBRATION ISOLATED.

   D. EQUIPMENT SHALL BE COMPLETELY FACTORY WIRED WITH ALL CONTROL AND PROTECTIVE DEVICES. ALL ROOFTOP EQUIPMENT 2000 CFM OR OVER SHALL HAVE SMOKE DETECTOR AND CONTROLS FOR SMOKE DETECTORS SHUTDOWN.

   E. FURNISH AND INSTALL CONDENSATE DRAIN PAN FLOAT SWITCH IN PRIMARY DRAIN PAN, DIVERSITECH MODEL CC-1 OR APPROVED EQUAL. INTERLOCK WITH DEDICATED UNIT FOR UNIT SHUTDOWN.

2. FANS

   A. FANS SHALL BE EQUAL TO THE MAKE AND MODEL(S) INDICATED AND SHALL BE LOCATED AS SHOWN ON DRAWINGS. FANS SHALL BE PENN, ACME, LOREN COOK OR GREENHECK.

   B. FANS SHALL BE FURNISHED COMPLETE WITH VIBRATION ISOLATION, PLUG TYPE DISCONNECT, NON-YELLOWING PLASTIC GRILLE, THERMAL OVER LOAD PROTECTION, AND INSULATED HOUSING.

3. ROOF CURBS

   A. CONTRACTOR SHALL PROVIDE ALL ROOF CURBS FOR ROOF MOUNTED EQUIPMENT. PREFAB ROOF CURB ASSEMBLIES SHALL BE GALVANIZED STEEL WITH WOOD NAILER STRIP. PITCHES SHALL MATCH SLOPE OF ROOF TO PROVIDE LEVEL EQUIPMENT MOUNTING.

4. DUCTWORK AND INSULATION

   A. ALL DUCTWORK SHALL BE SHEETMETAL EXCEPT AS NOTED. CONSTRUCTION STANDARDS AND RECOMMENDATIONS OF SMACNA SHALL BE FOLLOWED WITH RESPECT TO CONSTRUCTION, INSTALLATION AND SUPPORTING OF ALL DUCTWORK. ALL JOINTS LONGITUDINAL AND TRANSVERSE SEAMS SHALL BE SEALED WITH GASKETS, MASTICS (ADHESIVES), TAPES, ETC. ALL SEALANT MATERIAL SHALL BE LISTED IN ACCORDANCE WITH UL 181A OR 181B.

   B. DIMENSIONS FOR SHEETMETAL WORK ON DRAWINGS ARE INSIDE CLEAR UNLESS OTHERWISE NOTED.

   C. ALL CONCEALED SUPPLY AND RETURN DUCTS SHALL BE EXTERNALLY INSULATED WITH 2" THICK FIBERGLASS FLEXIBLE DUCT INSULATION WITH VAPOR BARRIER, MANVILLE CORPORATION, CERTAINTEED OR KNAUF. INSULATION MATERIALS AND COMPONENTS SHALL HAVE MAXIMUM COMPOSITE FIRE AND SMOKE HAZARD RATINGS OF 25 FLAME SPREAD, 50 SMOKE DEVELOPED AND 50 FOR FLAME SPREAD. APPLY VAPOR BARRIER JACKET TO COMPLETELY SEAL BARRIER AND REPAIR PUNCTURES. STAPLE ALL SEAMS AND SEAL WITH REINFORCED FOIL TAPE.

   D. EXPOSED SUPPLY AND RETURN DUCTS WITHIN CONDITIONED SPACE SHALL HAVE 1" THICK INTERNAL INSULATION AT 1.5 LB DENSITY, GLUED AND PINNED. WHERE INTERNAL LINER AND EXTERNAL WRAP MEET, THEY SHALL OVERLAP BY MINIMUM OF 6". INSULATION SHALL BE BY MANVILLE CORPORATION, CERTAINTEED OR KNAUF. PAINT PER ARCHITECT.

   E. TRUNK DUCTS SHALL BE ISOLATED FROM UNIT VIBRATION WITH THE USE OF NFPA AND U.L. APPROVED FLEXIBLE CONNECTORS IN BOTH SUPPLY AND RETURN.

   F. ALL ROUND DUCT SHALL BE SIZED AS SHOWN ON DRAWINGS. PROVIDE 2" THICK SLEEVE INSULATION TO PREVENT CONDENSATION. INSULATED FLEXIBLE DUCT MAY BE UTILIZED FOR CONNECTION TO GRILLES AND REGISTERS IN MAXIMUM LENGTHS OF 6'-0" PER BRANCH RUN. FLEXIBLE DUCT SHALL BE CERTAINTEED, WIREMOLD OR MANVILLE CORPORATION, FLEX METAL INSULATED WITH ACOUSTICAL VINYL VAPOR BARRIER, U.L. APPROVED WITH CONDUCTANCE .22 AT 75 DEGREES F. FLEXIBLE CONNECTIONS SHALL BE TESTED IN ACCORDANCE WITH UL181 AND LISTED AS CLASS 0 OR CLASS 1.

   G. ROUND PIPE TAKE-OFFS SHALL BE SPIN-IN OR AIR-TIGHT TYPE WITH DAMPERS, NO AIR SCOOPS. ALL ROUND PIPE TO BE CONNECTED WITH SHEET METAL SCREWS AND SUPPORTED WITH 1" METAL STRAP. RECTANGULAR TAKE-OFFS AND BRANCHES SHALL BE 45 DEGREE ANGLE BOOT OR TEE.

   H. RADIUSED DUCTWORK ELBOWS SHALL HAVE A CENTERLINE RADIUS OF 1.5 TIMES THE DUCT WIDTH (OR DIAMETER) UNLESS NOTED OTHERWISE.

   I. ALL MITERED ELBOWS (RECTANGULAR AND ROUND) SHALL HAVE DOUBLE THICKNESS TURNING VANES INSTALLED UNLESS NOTED OTHERWISE ON DRAWINGS.

   J. ALL DUCTWORK BRANCHES SHALL BE SUPPLIED WITH A VOLUME DAMPER FOR BALANCING. VOLUME DAMPER SHALL HAVE A 2" OFFSET TO ACCOMMODATE EXTERNAL INSULATION.

5. AIR DEVICES

   A. AIR DEVICES SHALL BE PRICE, TITUS OR METALAIRE WITH FRAME TYPE SUITABLE FOR CEILING FINISH. ALL CEILING DIFFUSERS WITHIN A SPACE SHALL HAVE UNIFORM FACE DIMENSIONS UNLESS OTHERWISE NOTED.

   B. CEILING DIFFUSERS SHALL BE SQUARE LOUVER TYPE WITH OPPOSED BLADE DAMPERS, OFF WHITE FINISH, SIZES AS SHOWN ON DRAWINGS.

   C. SUPPLY AIR REGISTERS SHALL BE HORIZONTAL FACE TYPE WITH OPPOSED BLADE DAMPERS, ALUMINUM, OFF WHITE FINISH, SIZES AS SHOWN ON DRAWINGS.

   D. CEILING RETURN AIR AND EXHAUST GRILLES SHALL BE 1/2" x 1/2" EGGCRATE TYPE WITH OFF-WHITE FINISH, ALUMINUM, SIZES AS SHOWN ON DRAWINGS.

   E. SIDEWALL RETURN AIR GRILLES SHALL BE HORIZONTAL FACE TYPE OF ALUMINUM CONSTRUCTION, OFF-WHITE FINISH OR AS SPECIFIED BY OWNER, SIZE AS SHOWN ON DRAWINGS.

6. GAS FIRED EQUIPMENT

   A. ALL GAS FIRED EQUIPMENT SHALL BE AGA CERTIFIED.

   B. BURNERS SHALL BE EQUIPPED WITH CONTROLS AND SAFETIES REQUIRED FOR COMPLETE AND FULLY OPERATIONAL SYSTEM. PILOT SHALL BE INTERMITTENT ELECTRIC IGNITION TYPE.

   C. HEAT EXCHANGER SHALL BE PROVIDED WITH A MINIMUM TEN (10) YEAR (PARTS ONLY) WARRANTY.

7. FLUES AND VENTS

   A. CONTRACTOR SHALL FURNISH AND INSTALL ALL FLUES AND VENTS SERVING SEALED COMBUSTION FURNACES SHALL BE POLYPROPYLENE VENT SYSTEM MEETING U.L. 1738 STANDARDS, CENTROTHERM OR APPROVED EQUAL. FLUES AND VENTS SERVING 80% EFFICIENT ATMOSPHERIC BURNERS SHALL BE U.L. LISTED DOUBLE WALL TYPE B WITH SIZES AS INDICATED ON DRAWINGS. PROVIDE WINDPROOF VENT CAPS AT ALL FLUE OUTLETS.

   B. CONSTRUCTION AND HEIGHT OF FLUE ABOVE ROOF SHALL CONFORM TO REQUIREMENTS OF NFPA 54 AND LOCAL CODES.

8. SLEEVES

   A. PROVIDE 18 GAGE SLEEVING AT MASONRY WALLS, ETC.

   B. SEAL ALL PENETRATIONS OF RATED PARTITIONS WITH U.L. LISTED FIRE BARRIER MATERIAL.

9. CONTROLS

   A. LOW VOLTAGE VENDOR SHALL FURNISH, ROUTE, AND INSTALL CONTROL WIRING & THERMOSTATS FOR HVAC SYSTEMS INCLUDING PACKAGED GAS UNITS.
   CONTROL WIRING CONNECTIONS TO BE MADE BY MECHANICAL CONTRACTOR. GC SHALL FURNISH AND INSTALL TEMPORARY THERMOSTATS.

   B. INSTALL THERMOSTATS AT 90" A.F.F. UNLESS NOTED OTHERWISE. THERMOSTAT LOCATIONS SHALL BE COORDINATED WITH FINAL LOCATIONS OF WALL-MOUNTED ARCHITECTURAL AND ELECTRICAL EQUIPMENT. FINAL LOCATIONS MUST BE APPROVED BY THE ARCHITECT AND OWNER. THERMOSTATS SHALL NOT BE INSTALLED ON EXTERIOR WALLS IF INTERIOR WALLS ARE AVAILABLE WITHIN SPACE SERVED BY THERMOSTAT. SHOULD THE THERMOSTAT REQUIRE INSTALLATION ON AN EXTERIOR WALL AN INSULATED BACKING PLATE MUST BE PROVIDED TO PREVENT FALSE READINGS BY THE THERMOSTAT.

10. CONDENSATE PIPING

   A. CONDENSATE DRAINS SHALL BE CONSTRUCTED WITH SCHEDULE 40 PVC, CPVC PIPING, OR TYPE L HARD DRAWN COPPER, SIZE AND ROUTING INDICATED ON PLANS. COPPER DRAIN PIPE AND FITTINGS SHALL BE JOINED USING 95-5 SILVER SOLDER, PVC PIPE AND FITTINGS SHALL BE JOINED USING SOLVENT CEMENT. PROVIDE 1/2" THICK, CLOSED CELL ELASTOMERIC INSULATION, ARMAFLEX, RUBATEX OR APPROVED EQUAL, FROM UNIT CONNECTION TO DISCHARGE FOR ALL INTERIOR CONDENSATE DRAIN PIPING. PROVIDE P-TRAP WITH CLEANOUT AT EACH EQUIPMENT CONDENSATE DRAIN CONNECTION. PROVIDE POSITIVE SLOPE FOR CONDENSATE DRAIN PIPING FROM P-TRAP TO DISCHARGE, MINIMUM SLOPE 1/8" PER LINEAR HORIZONTAL FOOT. SUPPORT CONDENSATE PIPING AT 5'-0" MAXIMUM INTERVALS.

PART 3 EXECUTION

1. FURNISH AND INSTALL SYSTEM IN ACCORDANCE WITH REFERENCED STANDARDS, APPLICABLE CODES, MANUFACTURERS RECOMMENDATIONS AND AS INDICATED ON DRAWINGS.

2. CONTRACTOR SHALL TEST AND BALANCE MECHANICAL SYSTEM. CONTRACTOR SHALL PROVIDE ALTERNATE PRICE FOR 3RD PARTY AABC CERITFIED TEST & BALANCE TO ASSURE CONFORMANCE WITH DESIGN. CONTRACTOR SHALL SUBMIT WRITTEN TEST AND BALANCE REPORT TO LOCAL CODE OFFICIALS AS REQUIRED.

3. CONTRACTOR SHALL INSTRUCT THE OWNER'S REPRESENTATIVE IN ALL MATTERS PERTAINING TO THE PROPER MAINTENANCE OF EQUIPMENT FURNISHED UNDER THIS CONTRACT.

4. CONTRACTOR SHALL PROGRAM ALL THERMOSTATS FOR OCCUPIED/UNOCCUPIED HOURS OF OPERATION. HOURS OF OPERATION AND TEMPERATURE SET POINTS PER OWNERS REQUEST. FAN SHALL RUN CONTINUOUSLY DURING OCCUPIED HOURS.

FAN SCHEDULE

FAN IDENTIFICATION	EF-1	EF-2	
MANUFACTURER	GREENHECK	GREENHECK	
MODEL NUMBER	SP-A190	SP-A190	
SERVICE AREA	MEN'S RR	WOMEN'S RR	
FAN TYPE	CABINET CENT.	CABINET CENT.	
CFM	150	150	
ESP	0.35	0.35	
SONES	1.5	1.5	
MOTOR POWER	46 WATTS	46 WATTS	
VOLTAGE/PHASE	115/60/1ø	115/60/1ø	
WEIGHT	17 LBS	17 LBS	
ACCESSORIES REQUIRED	A,B,C	A,B,C	

ACCESSORIES:
A: BACKDRAFT DAMPER
B: WALL CAP
C: VARIABLE SPEED CONTROLLER

REMARKS:
- EF-1 & 2 SHALL BE INTERLOCKED WITH LIGHTSWITCH SERVING THEIR RESPECTIVE SPACES.

PACKAGED GAS FIRED AC UNIT SCHEDULE

425 SQ FT. PER TON

IDENTIFICATION	RTU-1	RTU-2, 3, & 4	RTU-5
MANUFACTURER	YORK	YORK	YORK
MODEL NUMBER	ZJ120N18	ZJ150N18	ZJ037N08
NOMINAL TONS	10	12-1/2	3
SEER	-	-	15.0
EER	12.0	12.0	12.2
VOLTAGE	480/3ø	480/3ø	480/3ø
UNIT M.C.A.	24.2	39.1	9.6
UNIT M.O.C.P.	30.0	50.0	15.0
TOTAL COOLING CAP. (MBH)	130.0	170.8	37.0
SENSIBLE COOLING CAP. (MBH)	96.0	121.3	26.8
FAN SECTION:			
CFM SUPPLY	4,000	5,000	1,200
CFM O.A. MIN	590	740	130
EVAP. FAN H.P.	3	5	1-1/2
ESP-IN WG.	.8	.8	.35
HEATING SECTION:			
FUEL	NAT. GAS	NAT. GAS	NATURAL GAS
HEATING INPUT (MBH)	180.0	180.0	80.0
HEATING OUTPUT MBH	144.0	144.0	65.0
FILTER	2"	2"	2"
OPERATING WT. (LBS.)	1,405	1,615	1,075
NOTES	1 THRU 22	1 THRU 22	1 THRU 8, 10 THRU 22

NOTES:
1. TRACTOR SUPPLY COMPANY HAS NATIONAL ACCOUNTS WITH YORK/JOHNSON CONTROLS & LENNOX. FOR YORK PLEASE EMAIL JOE.RAY@JCI.COM OR CALL 1-405-419-6613 FOR YORK/JOHNSON CONTROLS QUOTATIONS AND TECHNICAL SUPPORT. FOR LENNOX PLEASE EMAIL STEVEN.PETER@LENNOXIND.COM OR CALL 1-800-367-6285 FOR LENNOX QUOTATIONS AND TECHNICAL SUPPORT. ACCEPTABLE ALTERNATE MANUFACTURER: LENNOX 'L' SERIES. **MUST BE COMPATIBLE WITH TSC FURNISHED EMS. MUST BE EQUAL TO OR BETTER THAN YORK PREDATOR/SUNLINE SERIES INCLUDING HINGED DOORS, HIGH EFFICIENCY, WARRANTY, AND MAINTENANCE REQUIREMENTS.**
2. COOLING CAPACITIES BASED ON 80°F DB / 67°F WB ENTERING COIL, 95°F DB ENTERING CONDENSER.
3. HEATING CAPACITY BASED ON NATURAL GAS AT 1000 BTU PER CUBIC FOOT AND 0.5 SPECIFIC GRAVITY.
4. PROVIDE FACTORY FURNISHED 14" HIGH INSULATED ROOF CURB.
5. PROVIDE FACTORY INSTALLED DIRTY FILTER SWITCH AND BLOWER PROVING SWITCH.
6. PROVIDE 1 YEAR LABOR AND 3 YEAR PARTS WARRANTY.
7. PROVIDE 5 YEAR PARTS WARRANTY ON COMPRESSORS.
8. PROVIDE 10 YEAR HEAT EXCHANGER WARRANTY.
9. PROVIDE FACTORY INSTALLED SMOKE DETECTORS ON THE RETURN DUCT DISCHARGES.
10. PROVIDE FACTORY INSTALLED DIFFERENTIAL ENTHALPY ECONOMIZER AND BAROMETRIC RELIEF. O.A. DAMPER SHALL CLOSE DURING UNOCCUPIED HOURS.
11. MECHANICAL CONTRACTOR SHALL PROVIDE A SECOND SET OF FILTERS TO BE INSTALLED PRIOR TO STORE OPENING.
12. UNIT SHALL USE R-410A REFRIGERANT (NO EXCEPTIONS).
13. **MECHANICAL CONTRACTOR SHALL PROVIDE A START UP CHECKLIST CONFIRMING ALL UNITS HAVE BEEN PROPERLY STARTED AND CONFIRMED RUNNING PROPERLY. CHECKLIST MUST BE PROVIDED TO TSC VIA CLOSE-OUT BINDER.**
14. STENCIL TAG NUMBER ON SIDE OF UNITS (FACING ROOF HATCH) WITH 3" HIGH LETTERS AND BLACK EXTERIOR PAINT.
15. NON-POWERED CONVENIENCE OUTLET.
16. PROVIDE COIL (HAIL) GUARDS.
17. ALL WORK TO INSTALL ALL CONTROL DEVICES AND WIRING SHALL BE COORDINATD BETWEEN THE GENERAL CONTRACTOR, MECHANICAL CONTRACTOR, ELECTRICAL CONTRACTOR, LOW VOLTAGE VENDOR, AND EMS VENDOR.
18. ELECTRICAL CONTRACTOR SHALL FURNISH AND INSTALL ALL CONDUITS AND GANG BOXES FOR THERMOSTATS. SEE DRAWINGS E5.1 FOR DETAILS.
19. ELECTRICAL CONTRACTOR SHALL FURNISH AND INSTALL ALL CONDUITS AND GANG BOXES AS SHOWN ON E5.0. AS NECESSARY FOR FINAL CONNECTIONS TO FUTURE EMS. COORDINATE FINAL LOCATION OF EMX PANEL WITH EMS VENDOR. SEE DRAWING E5.1 FOR DETAILS.
20. MECHANICAL CONTRACTOR SHALL FURNISH AND INSTALL TEMPORARY THERMOSTATS AND WIRING FOR CONNECTION TO HVAC UNITS. VERIFY FINAL HEIGHT AND PROVIDE 5' OF ADDITIONAL COILED CABLE.
21. LOW VOLTAGE VENDOR SHALL FURNISH AND INSTALL FINAL THERMOSTATS, CARBON DIOXIDE SENSORS, HUMIDITY SENSORS, AND PRE-WIRE FOR EMS. SEE DRAWINGS E5.1 FOR DETAILS.
22. FINAL CONTROL CONNECTIONS TO EMS PANEL TO BE MADE BY EMS VENDOR.

REMARKS:
- PROVIDE POWER TO UNITS THROUGH KNOCK-OUTS, OR IN CURB. DO NOT PENETRATE ROOF.
- REFER TO E3.1 FOR THERMOSTAT MOUNTING INSTRUCTIONS.
- O.A. DAMPER SHALL CLOSE DURING UNOCCUPIED HOURS.

AIR DISTRIBUTION SCHEDULE

SYMBOL	MFGR. & MODEL #	DEVICE	FACE	DEVICE SIZE	VOLUME CONTROL	COLLAR SIZE	REMARKS
A	TITUS MOD. TMSA-AA	SUPP. DIFF.	LOUVERED	24" x 24"	M.V.D.	6"ø	SEE NOTE 1-4
B	TITUS MOD. TMSA-AA	SUPP. DIFF.	LOUVERED	24" x 24"	M.V.D.	10"ø	SEE NOTE 1-4
R	TITUS MOD. 50 F	RET. GRILLE	EGGCRATE	24" x 24"			SEE NOTE 5

NOTES:
1. ALL AIR DEVICES TO HAVE COLOR PER ARCHITECT
2. PROVIDE ROUND NECK COLLARS FOR CEILING DIFFUSERS UNLESS NOTED OTHERWISE.
3. PROVIDE LAY-IN TYPE BORDER FOR CEILING WITH ACOUSTICAL TILE AND SURFACE MTD. TYPE BORDER FOR GYPBOARD CEILINGS (REFER ARCHITECTURAL DWG'S)
4. ALL SQUARE CEILING DIFFUSERS ARE TO BE FULL LOUVERED FACE (NO BLANK PANEL)
5. PROVIDE RETURN AIR GRILLES WITH NECK SIZE EQUIVALENT TO RUNOUT SHOWN ON DRAWING.

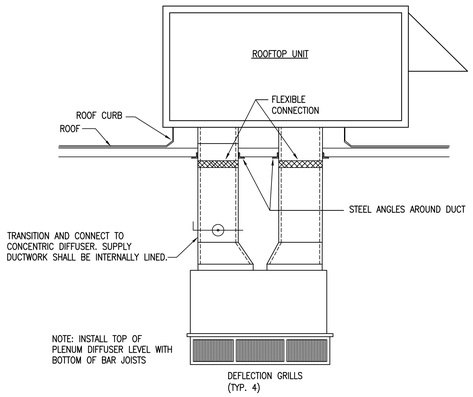

CONCENTRIC DIFFUSER DETAIL

SCALE: NONE

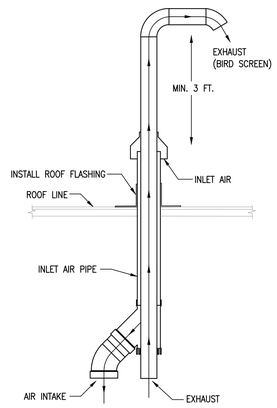

VERTICAL CONCENTRIC VENT DETAIL

SCALE: NONE

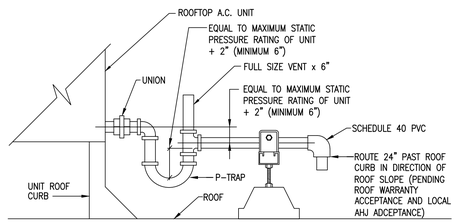

ROOFTOP A/C UNIT
CONDENSATE DRAIN PIPING

SCALE: NONE

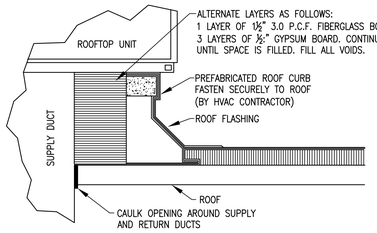

ROOFTOP UNIT CURB DETAIL

SCALE: NONE

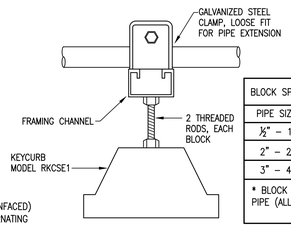

BLOCK SPACING CHART (METAL PIPE)	
PIPE SIZE	MAX SPACING
½" - 1½"	6'
2" - 2½"	10'
3" - 4"	12'

* BLOCK SPACING FOR PLASTIC PIPE (ALL SIZES) SHALL BE 4' MAX

PIPE SUPPORT DETAIL

SCALE: NONE

NOTE:
NO WOOD ALLOWED FOR PIPE SUPPORTS.

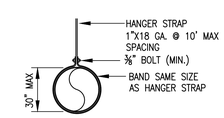

ROUND DUCT SUPPORT DETAIL

SCALE: NONE

OXFORD ARCHITECTURE
2934 Sidco Drive
Suite 120
Nashville, TN 37204
Architecture
Planning
Interior Architecture

Schelton ENGINEERING
1163 West Main St.
Franklin, TN 37064
Tel: 615.730.9111 / Fax: 615.224.3599
gary@scheltonengineering.com
Project #24-077

TRACTOR SUPPLY COMPANY

BOUTTE, LOUISIANA

Tractor Supply Company shall not be responsible for the payment of any work performed or material supplied by the Contractor or any of its sub-contractors, sub-subcontractors and anyone claiming by through or under any of them which is not identified in writing and signed by one of the following Tractor Supply Company personnel: Vice President Real Estate, Director of Construction, or a Construction Project Manager. No action, conduct, omission, prior failure, or course of dealing by Tractor Supply Company shall act to waive, modify, change or alter the requirement that all work, whether by contract, change order or change directive, must be in writing and signed by the personnel identified in this provision. Any work performed or material provided by the Contractor, any of its sub-contractors, sub-subcontractors contrary to this provision shall be at its own risk and own expense and Tractor Supply Company shall not be obligated to reimburse or pay the Contractor or any of its sub-contractors, sub-subcontractors for same.

All measurements and items portrayed on this sheet are deemed to be accurate by architect, however all bidding General Contractors should field verify the actual conditions. Any changes to the scope of work, and thus potential change orders, should be identified and communicated in your bid submittal to TSC.

This drawing and the design shown is the property of the architect. The reproduction, copying or use of this drawing without their written consent is prohibited and any infringement will be subject to legal action

Job Number: 2428

Date: 07.23.2024

Revisions:

Revisions:

Revisions:

MECHANICAL SCHEDULES, DETAILS, AND SPECIFICATIONS

Sheet Number: M2.0

CONSTRUCTION NOTES

1. EXPOSED PIPING SHALL BE ROUTED TIGHT TO CORNER. TURN DOWN WITHIN 3" FUR OUT BETWEEN DRESSING ROOM AND EXTERIOR WALL. REFER TO DETAILS. PIPING SHALL NOT BE ROUTED DOWN WITHIN DRESSING ROOM.
2. TURN ¾" CW DOWN WITHIN 18" OF BUILDING CORNER.
3. CONNECT HOSE BIBB TO HOSE REEL USING ¾" RUBBER TUBING WITH ADEQUATE SLACK FOR HOSE REEL TO PIVOT AND ROTATE FREELY. THE ¾" PIPING FOR HOSE REEL SHOULD BE INSULATED AND MOUNTED/SUSPENDED TO GARDEN CENTER TRUSS FRAMING SYSTEM.

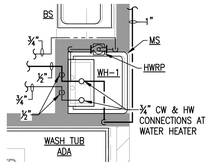

INSTANTANEOUS WATER HEATER ABOVE MOP SINK ENLARGED PLAN

SCALE: 1/2" = 1'-0"

UTILITY INFORMATION

WATER	ST. CHARLES PARISH WATERWORKS 403 MILLING AVE. LULING, LA 70070 CONTACT: SEAN LEWIS PH: 985-783-5110
NATURAL GAS	ATMOS ENERGY 5241 TARAVELLA RD. MARRERO, LA 70072 CONTACT: TONI CHAGNARD PH: 504-380-5074

PLUMBING FIXTURE LEGEND

SYMBOL	DESCRIPTION
	COLD WATER ABOVE SLAB
	HOT WATER ABOVE SLAB
	COLD WATER BELOW SLAB OR GRADE
	WASTE LINE BELOW SLAB OR GRADE
	VENT LINE ABOVE OR BELOW SLAB
GAS	GAS LINE ABOVE SLAB OR GRADE
	EXTERIOR CLEANOUT UP FROM BELOW SLAB OR GRADE
	CLEANOUT UP FROM BELOW FLOOR OR SLAB
	PIPE TURNED DOWN
	PIPE TURNED UP
	BALL VALVE
	HOSE BIBB
	NEW FIXTURES
WC-1, ETC.	FIXTURE IDENTIFICATIONS
CW	COLD WATER
HW	HOT WATER
VTR	VENT THRU ROOF
ECO	EXTERIOR CLEANOUT
ICO	INTERIOR CLEANOUT
WCO	WALL CLEANOUT
A.F.F.	ABOVE FINISHED FLOOR
	PRESSURE REGULATING VALVE

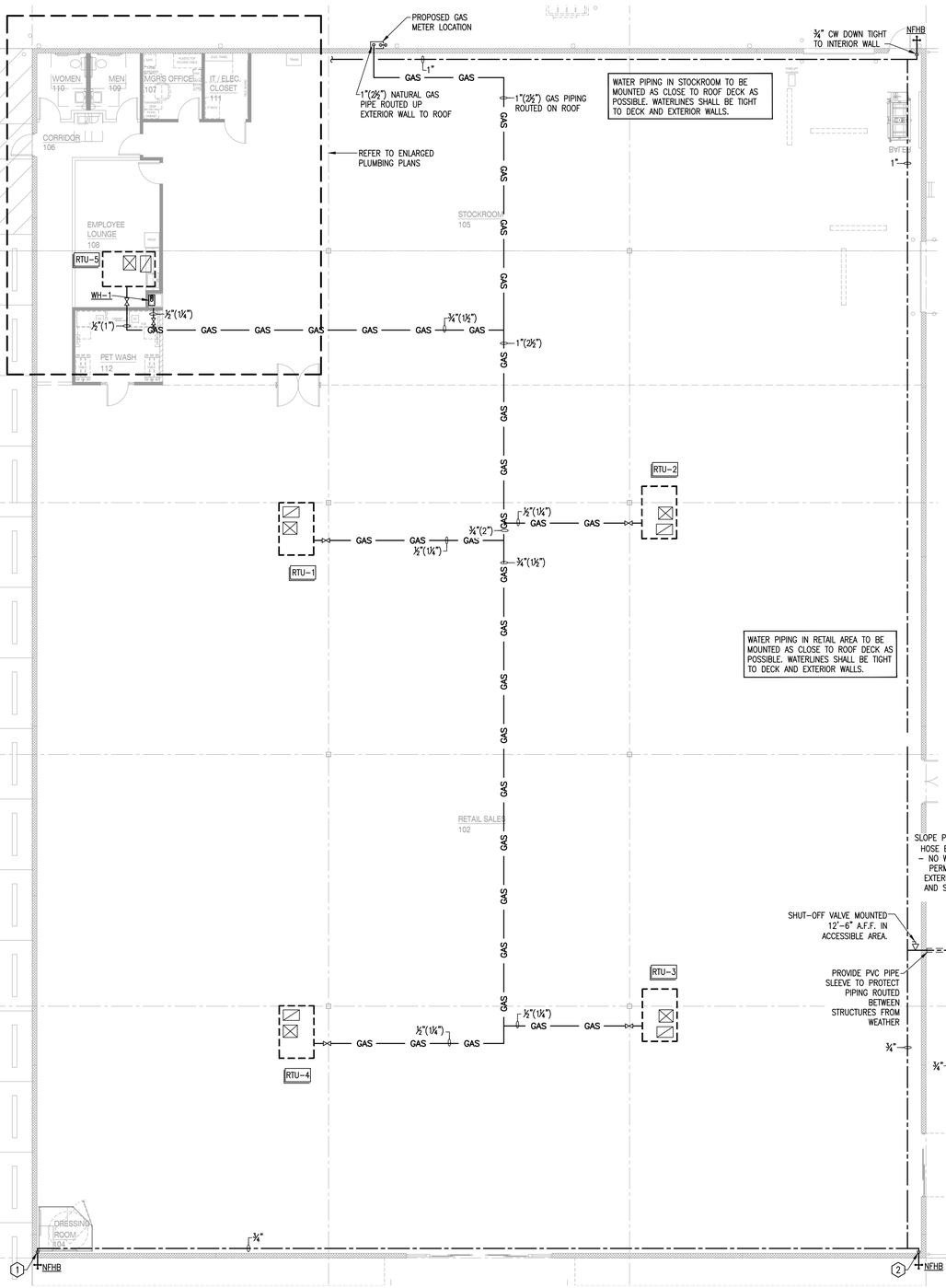

PLUMBING FLOOR PLAN

SCALE: 1/8" = 1'-0"

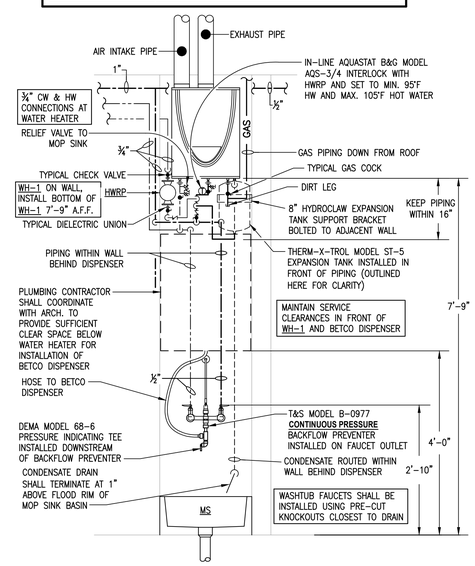

INSTANTANEOUS WATER HEATER ABOVE MOP SINK DETAIL - ELEVATION VIEW

SCALE: 3/4" = 1'-0"

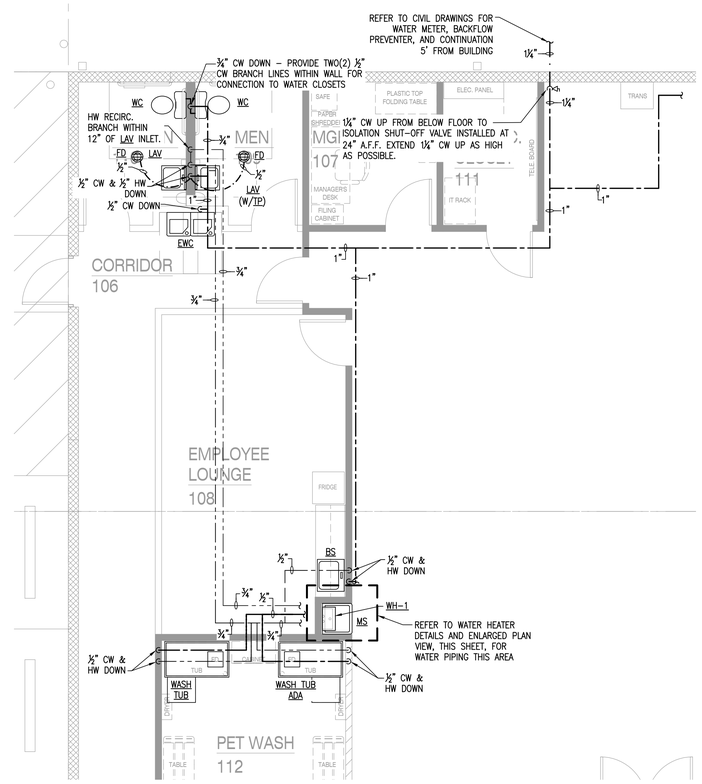

ENLARGED PLUMBING PLAN: WATER

SCALE: 1/4" = 1'-0"

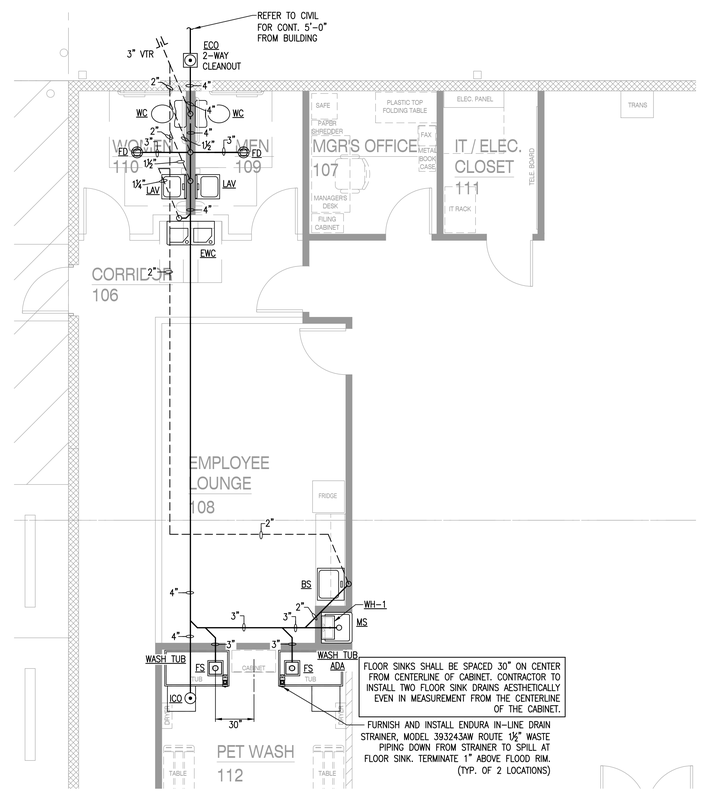

ENLARGED PLUMBING PLAN: WASTE/VENT

SCALE: 1/4" = 1'-0"

OXFORD ARCHITECTURE

2934 Sidco Drive
Suite 120
Nashville, TN 37204

Architecture
Planning
Interior Architecture

Schelton ENGINEERING
1163 West Main St.
Franklin, TN 37064
Tel: 615.730.9111 / Fax: 615.224.3599
gary@scheltonengineering.com
Project #24-077

TSC

TRACTOR SUPPLY COMPANY

BOUTTE, LOUISIANA

Tractor Supply Company shall not be responsible for the payment of any work performed or material supplied by the Contractor or any of its sub-contractors, sub-subcontractors and anyone claiming by through or under any of them which is not identified in writing and signed by one of the following Tractor Supply Company personnel: Vice President Real Estate, Director of Construction, or a Construction Project Manager. No action, conduct, omission, prior failure, or course of dealing by Tractor Supply Company shall act to waive, modify, change or alter the requirement that all work, whether by contract, change order or change directive, must be in writing and signed by the personnel identified in this provision. Any work performed or material provided by the Contractor, any of its sub-contractors, sub-subcontractors contrary to this provision shall be at its own risk and own expense and Tractor Supply Company shall not be obligated to reimburse or pay the Contractor or any of its sub-contractors, sub-subcontractors for same.

All measurements and items portrayed on this sheet are deemed to be accurate by architect, however all bidding General Contractors should field verify the actual conditions. Any changes to the scope of work, and thus potential change orders, should be identified and communicated in your bid submittal to TSC.

This drawing and the design shown is the property of the architect. The reproduction, copying or use of this drawing without their written consent is prohibited and any infringement will be subject to legal action

Job Number: 2428

Date: 07.23.2024

Revisions:

Revisions:

Revisions:

PLUMBING FLOOR PLAN

Sheet Number: P1.0

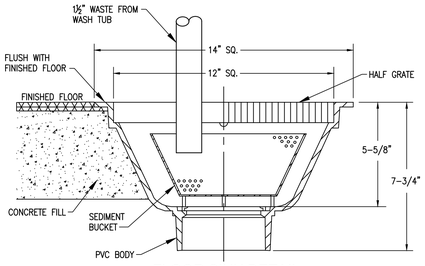

FLOOR SINK DETAIL

SCALE: NONE

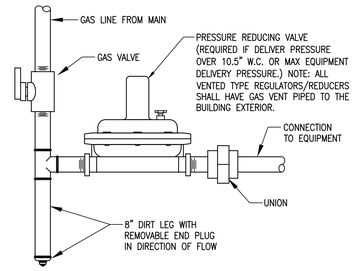

TYPICAL GAS CONNECTION DETAIL

SCALE: NONE

BLOCK SPACING CHART (METAL PIPE)	
PIPE SIZE	MAX SPACING
½" – 1½"	6'
2" – 2½"	10'
3" – 4"	12'
* BLOCK SPACING FOR PLASTIC PIPE (ALL SIZES) SHALL BE 4' MAX	

NOTE:
NO WOOD ALLOWED FOR PIPE SUPPORTS.

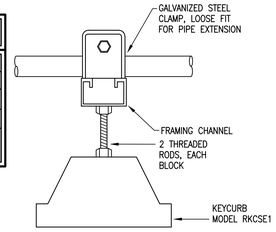

GAS PIPE SUPPORT DETAIL

SCALE: NONE

PLUMBING FIXTURE SCHEDULE

MARK	DESCRIPTION	UTILITIES CW	HW	DR	VENT
WC	WATER CLOSET (FLOOR MOUNTED ADA., PRESSURE ASSISTED FLUSH TANK, MOTION ACIVATED): KOHLER HIGHLINE K–3519, 12" ROUGH–IN, 1.0 GPF, WITH SLOAN FLUSHMATE PRESSURE ASSIST, LOW CONSUMPTION, VITREOUS CHINA, 17–1/8" HIGH, ELONGATED BOWL FLUSH TANK WATER CLOSET WITH LEFT HAND TRIP LEVER. PROVIDE BEMIS 1055 SSC ELONGATED OPEN FRONT TOILET SEAT, K–5420 BOLT CAPS. FOR RIGHT HAND TRIP LEVER PROVIDE WITH ALTERNATE TANK CONFIGURATION MODEL K–3519–RH. CONTRACTOR SHALL BE RESPONSIBLE FOR COORDINATING CORRECT TANK SELECTION WITH LATEST ARCHITECTURAL DRAWINGS TO ACCOMMODATE ADA ACCESSIBILITY PRIOR TO ORDERING. RETROFIT WITH INTELLI–FLUSH K–100101 WALL SENSOR, POWERED BY FOUR(4) AA BATTERIES, CHROME FINISH. INTELLI–FLUSH SYSTEM MUST BE ORDERED SEPARATELY FROM FLUSHMATE. CONTACT LORI FELTMATE AT FLUSHMATE FOR ORDERING INFORMATION. PH:(248)446–8159 EMAIL: Lori.Feltmate@Flushmate.com	½"	X	4"	2"
LAV	LAVATORY (ACCESSIBLE, WALL HUNG, MOTION ACTIVATED): KOHLER KINGSTON WALL–MOUNT K–2005, VITREOUS CHINA LAVATORY WITH A ZURN AQUASENSE BATTERY POWERED Z6915–XL FAUCET, POLISHED CHROME FINISH, KOHLER K–23726 DRAIN, KOHLER K–8998 P–TRAP AND KOHLER K–23725 CAST IRON CLEANER. MOUNT FIXTURE WITH FLOOD RIM 34" AFF. FURNISH AND INSTALL WITH ZURN MODEL ZW3870XLT THERMAL MIXING VALVE FOR MAX. 110°F HOT WATER.	½"	½"	1¼"	1¼"
BS	BREAKROOM SINK: (SINGLE BOWL, S.S., GOOSENECK): PROVIDED BY TRACTOR SUPPLY COMPANY & INSTALLED BY CONTRACTOR.	½"	½"	1½"	1¼"
EWC	ELECTRIC WATER COOLER (ACCESSIBLE, MOTION SENSOR, DUAL–HEIGHT): MURDOCK MODEL A172108F–UG–B512–BCD WITH INFRARED SENSOR CONTROL AND WALL MOUNTING BRACKET. 8 GPH, 115/1/60. MOUNT HIGH UNIT AT 42" MAX. FROM FLOOR TO SPOUT OUTLET AND LOW UNIT AT 36" MAXIMUM FROM FLOOR TO SPOUT OUTLET. PROVIDE MCGUIRE 8912 P–TRAP AND MCGUIRE 165 SUPPLY WITH STOP. COORDINATE WITH ELECTRICAL CONTRACTOR TO LOCATE RECEPTACLE BEHIND WATER COOLER CABINET. PROVIDE WITH BOTTLE FILLER. CONTACT BERRY JONES FOR ORDERING INFORMATION. PH: 800–459–7099 EMAIL: berry.jones@hjcinc.com.	½"	X	1¼"	1¼"
MS	MOP SINK : MUSTEE MODEL 63M 24"x24" FIBERGLASS MOP SERVICE BASIN. COMPLETE WITH MODEL 63.401 EXTRUDED BUMPER GUARD, CHICAGO MODEL 897–RCF CHROME PLATED SPOUT WITH VACUUM BREAKER, ¾" HOSE THREAD OUTLET, PAIL HOOK. WALL SUPPORT, INTEGRAL STOPS, MODEL 369 2½" METAL LEVER HANDLES AND 36" LENGTH OF THREADED HOSE. FURNISH AND INSTALL T&S MODEL B–0977 THREADED CONTINUOUS PRESSURE VACUUM BREAKER AND DEMA MODEL 68–6 PRESSURE INDICATING TEE ON FAUCET OUTLET FOR HOSE CONNECTION TO BETCO DISPENSER. VACUUM BREAKER TO BE INSTALLED UPSTREAM OF PRESSURE INDICATING TEE.	½"	½"	3"	1½"
WH–1	WATER HEATER (GAS INSTANTANEOUS, 96% EFFICIENCY, 120V/1ø, 4 AMPS): A.O. SMITH MODEL 540H OR EQUAL, INTERIOR WALL MOUNTED, GAS, INSTANTANEOUS WATER HEATER, RATED AT 13,000 TO 199,000 BTUH, WITH CAPACITY OF 0.26–9.8 GAL./MIN. WATER HEATER SHALL CONFORM TO IECC 701, 504, AND ASHRAE 90.1. SET TO 120°F OUTLET TEMP. PROVIDE W/ ISOLATION VALVE, CONDENSATE NEUTRALIZER PART #100112163, AND INNOFLUE CONCENTRIC ROOF TERMINATION BY CENTROTHERM OR APPROVED EQUAL. SHALL MEET UL–1738 STANDARDS.	¾"	¾"	X	X
FD	FLOOR DRAIN (3" DIA. OUTLET): ROUND TOP, J.R. SMITH MODEL 2005Y–A–P050–PB WITH CAST IRON BODY AND FLASHING COLLAR, TRAP PRIMER CONNECTION AND POLISHED BRONZE STRAINER. INSTALL WITH TOP FLUSH WITH FINISHED FLOOR.	X	X	3"	1½"
TP	TRAP PRIMER: JOSAM FIG. NO. 88250, AUTOMATIC TRAP PRIMER, MOUNTED INSIDE WALL CAVITY UNDER LAVATORY. PROVIDE 8" X 8" ACCESS PANEL TO CLEAR LAVATORY ROUGH–IN AND PAINTED TO MATCH WALL. RUN 1/2" COPPER LINE FROM TRAP PRIMER TO ADJACENT FLOOR DRAIN AS SHOWN ON THE CONTRACT DRAWINGS. **INLINE FLOOR DRAIN TRAP SEAL MAY BE USED IN LIEU OF TRAP PRIMERS PENDING LOCAL CODE APPROVAL. TRAP SEALS SHALL MEET REQUIREMENTS OF ASSE 1072 AND SHALL BE MADE OF CHEMICALLY RESISTANT ELASTOMER.**	½"	X	X	X
WHA	WATER HAMMER ARRESTER: JOSAM FIG. NO. 75001 THROUGH 75006, SIZE AS RECOMMENDED BY MANUFACTURER.	X	X	X	X
HB	HOSE BIBB (METAL WHEEL HANDLE): WOODFORD MODEL 24, ANTI SIPHON, NIDEL MODEL 34HF VACUUM BREAKER. PROVIDE WITH METAL WHEEL HANDLE.	¾"	X	X	X
NFHB	HOSE BIBB (NON–FREEZE, KEYED HANDLE): WOODFORD MODEL 67, ¾", AUTOMATIC DRAINING BRASS FINISH, NIDEL MODEL 34HA VACUUM BREAKER. PROVIDE LOOSE TEE KEY FOR EACH HYDRANT.	¾"	X	X	X
FS	FLOOR SINK (14"X14"): ZURN MODEL FS12–6–PV3 14"X14" PVC FLOOR SINK WITH 3" PVC HUB CONNECTION. FURNISH WITH SEDIMENT BUCKET JP2370–Y3, HALF–GRATE JP2370–H, AND P–TRAP. FLOOR SINKS SHALL BE INSTALLED 30" ON CENTER FROM CENTERLINE OF MOP SINK.	X	X	3"	1½"
WASH TUB & WASH TUB ADA	PET WASH TUB: TUB AND ANTI–SIPHON TYPE FAUCET TO BE PROVIDED BY TSC AND INSTALLED BY CONTRACTOR. CONTRACTOR TO FURNISH AND INSTALL WITH ENDURA IN–LINE DRAIN STRAINER, MODEL 393243AW, BELOW TUB IN PLACE OF P–TRAP. STRAINER CLEANOUT SHALL BE INSTALLED IN EASILY ACCESSIBLE LOCATION. TSC TO FURNISH AND CONTRACTOR TO INSTALL SMARTWAY HAIR INTERCEPTOR IN PLACE OF A STRAINER BASKET IN BASIN OF EACH WASH TUB. COORDINATE LEFT HAND / RIGHT HAND CONFIGURATION AS SHOWN ON DRAWINGS WITH TSC. FURNISH COMPLETE WITH TEMPERATURE LIMITING MIXING VALVE.	½"	½"	1½"	1½"
HWRP	HOT WATER RECIRCULATION PUMP (FOR USE AT WATER HEATER): BELL & GOSSETT MODEL PL–30B WITH ¾" CONNECTIONS, RATED @ 1/12 HP, 120–1–60, .5 GPM AT .75 TDH. PROVIDE MAIN CUTOFF SWITCH (MANUAL) FOR PUMP TO CUT OFF POWER AS REQUIRED UNDER ASHRAE STANDARD 9075, PARAGRAPH 7.6. INSTALL & SUPPORT PUMP PER SCHEMATIC ON CONTRACT DRAWINGS AND MANUFACTURER'S RECOMMENDATIONS.	¾"	X	X	X
HR	HOSE REEL: REEL CRAFT MODEL GCD83050 OLP. MOUNT FROM STRUCTURE. COORDINATE EXACT LOCATION WITH LATEST TSC FIXTURE PLAN AND TSC PM.	¾"	X	X	X

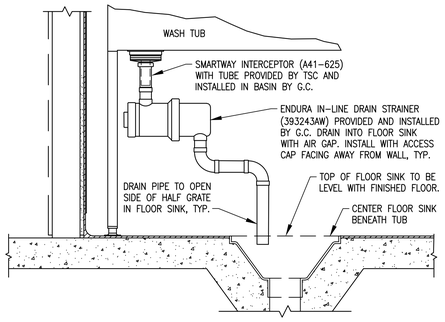

WASH TUB AT FLOOR SINK

SCALE: NONE

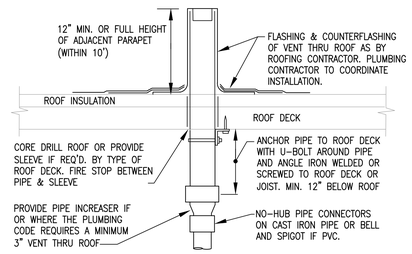

REFER TO PLANS FOR VTR PIPE SIZES AND LOCATIONS. LOCATE VTR MIN. THREE FEET FROM PROPERTY LINE, OR TEN FEET HORIZONTAL OR THREE FEET VERTICAL ABOVE ANY BUILDING OPENING OR FRESH AIR INTAKE, OR ONE FOOT FROM ANY VERTICAL SURFACE. LOCATE VTR MINIMUM 18" FROM PARAPET, EXPANSION JOINT, EQUIPMENT CURB, ETC. OFFSET IN CEILING SPACE WHERE REQUIRED TO MEET THESE CONDITIONS.

VENT THRU ROOF - VTR

SCALE: NONE

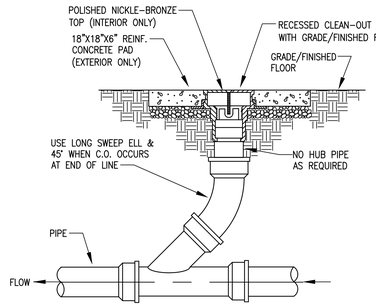

CLEAN-OUT DETAIL

SCALE: NONE

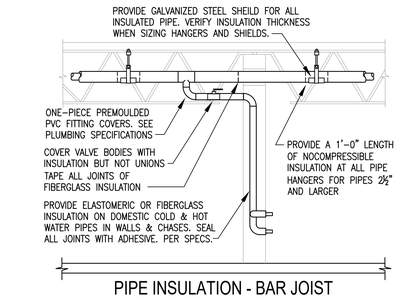

PIPE INSULATION - BAR JOIST

SCALE: NONE

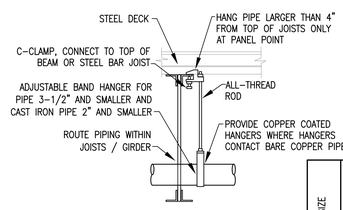

PROVIDE UPPER ATTACHMENT AS REQUIRED FOR CASES NOT SHOWN HERE. DO NOT INSTALL HANGER INSIDE INSULATION OR OTHERWISE PENETRATE VAPOR BARRIER. DO NOT HANG ONE PIPE FROM ANOTHER EXCEPT IN CHASES. SLOPE ALL WATER PIPING SLIGHTLY TOWARD DRAINABLE LOCATIONS. HANGER SPACING FOR PIPE SIZE: AS INDICATED ON TABLE. CAST IRON:: 10' AND WITHIN 1'–0" OF ALL JOINTS. ROD SIZES FOR PIPE SIZE: 2" AND SMALLER = ⅜", 2½" TO 3" = ½", 4=⅝", 6"=¾", 8" AND LARGER = ⅞". LOCATE HANGERS WITHIN 1'–0" OF VALVES AND FITTINGS. PROVIDE SUPPLEMENTARY STEEL STRUTS BETWEEN JOISTS IF REQUIRED. LOCATE HANGERS WITHIN 1'–0" OR EQUIPMENT CONNECTIONS. ANCHOR WATER PIPE AGAINST SWAYING DUE TO CHANGES IN WATER VELOCITY. CHAINS AND PERFORATED STRAP IRON AND STEEL ARE NOT ACCEPTABLE. DO NOT SUSPEND PIPE FROM JOIST BRACING MEMBERS. REFER TO CODE AND SPECIFICATIONS FOR FURTHER INFORMATION. PROVIDE SEISMIC BRACING IF/AS REQUIRED BY LOCAL AUTHORITIES. TRAPEZE HANGERS MAY BE USED FOR MULTIPLE PARALLEL PIPES, SEE "TRAPEZE PIPE HANGER DETAIL"

PIPE SIZE	COPPER PIPE HANGER SPACING	STEEL PIPE HANGER SPACING	PEX PIPE HANGER SPACING
½"	5'	7'	32"
¾"	5'	7'	32"
1"	6'	7'	32"
1¼"	7'	8'	32"
1½"	8'	9'	32"
2"	8'	10'	32"
2½"	10'	11'	32"
3"	11'	12'	32"
4"	12'	12'	32"

PIPE HANGER - BAR JOIST

SCALE: NONE

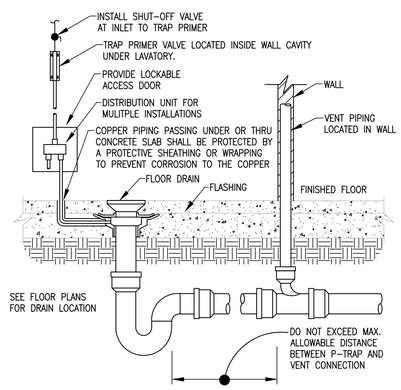

FLOOR DRAIN DETAIL

SCALE: NONE

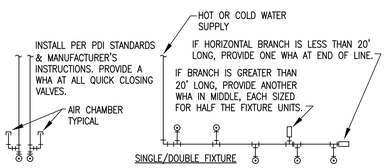

PDI SIZE	PIPE SIZE	FIXTURE UNIT LOAD
A	½"	1–11
B	¾"	12–32
C	1"	33–60
D	1¼"	61–113
E	1½"	114–154
F	2"	154–330

WATER HAMMER ARRESTERS

SCALE: NONE

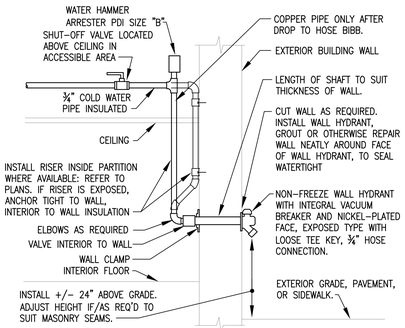

NON-FREEZE WALL HYDRANT

SCALE: NONE

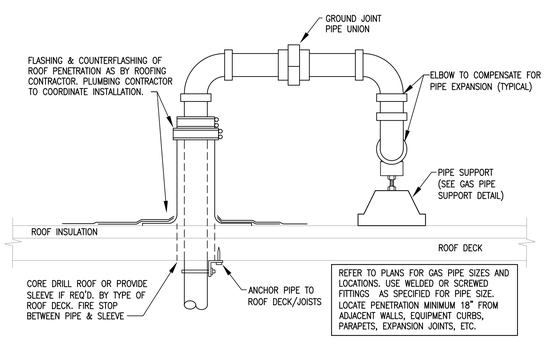

REFER TO PLANS FOR GAS PIPE SIZES AND LOCATIONS. USE WELDED OR SCREWED FITTINGS AS SPECIFIED FOR PIPE SIZE. LOCATE PENETRATION MINIMUM 18" FROM ADJACENT WALLS, EQUIPMENT CURBS, PARAPETS, EXPANSION JOINTS, ETC.

GAS PIPING ROOF PENETRATION

SCALE: NONE

GAS CONNECTION SCHEDULE

EQUIPMENT	LOAD
RTU–1	180,000 BTUH
RTU–2	180,000 BTUH
RTU–3	180,000 BTUH
RTU–4	180,000 BTUH
RTU–5	80,000 BTUH
WH–1	199,000 BTUH
TOTAL NEW CONNECTED LOAD:	999,000 BTUH

ALL NATURAL GAS PIPING IS SIZED FOR SCHEDULE 40 METALLIC PIPE.

GAS LINE SIZED AT 2.0 PSI INLET PRESSURE WITH 1.0 PSI PRESSURE LOSS FOR 250'–0" FURNISH AND INSTALL PRV AT EQUIPMENT CONNECTION AS REQUIRED. CONTRACTOR SHALL VERIFY GAS AVAILABILITY @ 2 PSI WITH LOCAL PROVIDER PRIOR TO CONSTRUCTION.

IF 2 PSI INLET PRESSURE IS UNAVAILABLE REFER TO PIPE SIZES INDICATED IN PARENTHESIS ON DRAWING SHEET P1.0.

WASTE & WATER FIXTURE LOAD CALCULATIONS

FIXTURE TAG	FIXTURE/EQUIPMENT	QUANTITY	WATER CW F.U. PER FIXTURE	HW F.U. PER FIXTURE	TOTAL F.U. PER FIXTURE	TOTAL F.U.	WASTE F.U. PER FIXTURE	TOTAL F.U.
WC	WATER CLOSET	2	5.0	–	5.0	10.0	4.0	8.0
LAV	LAVATORY	2	1.5	1.5	2.0	4.0	1.0	2.0
BS	BREAK ROOM SINK	1	1.0	1.0	1.4	1.4	2.0	2.0
EWC	ELECT. WATER COOLER	1	0.25	–	0.25	0.25	–	–
MS	MOP SINK	1	2.25	2.25	3.0	3.0	2.0	2.0
FD	FLOOR DRAIN	2	–	–	–	–	2.0	4.0
WASH TUB	PET WASHING TUB	2	2.25	2.25	3.0	6.0	2.0	4.0
FS	FLOOR SINK	2	–	–	–	–	4.0	4.0
TOTALS						24.65		26.0

MAXIMUM WATER DEMAND AT 24.65 F.U. = 23 GPM + 25 GPM (H.B.) = 1 1/4" MIN. WATER MAIN SUPPLY

MAXIMUM WASTE DEMAND AT 26.0 F.U. = 4" SANITARY SEWER WASTE

FIXTURE UNITS BASED ON 2015 INTERNATIONAL PLUMBING CODE

OXFORD ARCHITECTURE
2934 Sidco Drive
Suite 120
Nashville, TN 37204
Architecture
Planning
Interior Architecture

Schelton ENGINEERING
1163 West Main St.
Franklin, TN 37064
Tel: 615.730.9111 / Fax: 615.224.3599
gary@scheltonengineering.com
Project #24-077

TSC

TRACTOR SUPPLY COMPANY

BOUTTE, LOUISIANA

Tractor Supply Company shall not be responsible for the payment of any work performed or material supplied by the Contractor or any of its sub–contractors, sub–subcontractors and anyone claiming by through or under any of them which is not identified in writing and signed by one of the following Tractor Supply Company personnel: Vice President Real Estate, Director of Construction, or a Construction Project Manager. No action, conduct, omission, prior failure, or course of dealing by Tractor Supply Company shall act to waive, modify, change or alter the requirement that all work, whether by contract, change order or change directive, must be in writing and signed by the personnel identified in this provision. Any work performed or material provided by the Contractor, any of its sub–contractors, sub–subcontractors contrary to this provision shall be at its own risk and own expense and Tractor Supply Company shall not be obligated to reimburse or pay the Contractor or any of its sub–contractors, sub–subcontractors for same.

All measurements and items portrayed on this sheet are deemed to be accurate by architect, however all bidding General Contractors should field verify the actual conditions. Any changes to the scope of work, and thus potential change orders, should be identified and communicated in your bid submittal to TSC.

This drawing and the design shown is the property of the architect. The reproduction, copying or use of this drawing without their written consent is prohibited and any infringement will be subject to legal action

Job Number: 2428

Date: 07.23.2024

Revisions:

Revisions:

Revisions:

PLUMBING SCHEDULES AND DETAILS

Sheet Number: P2.0

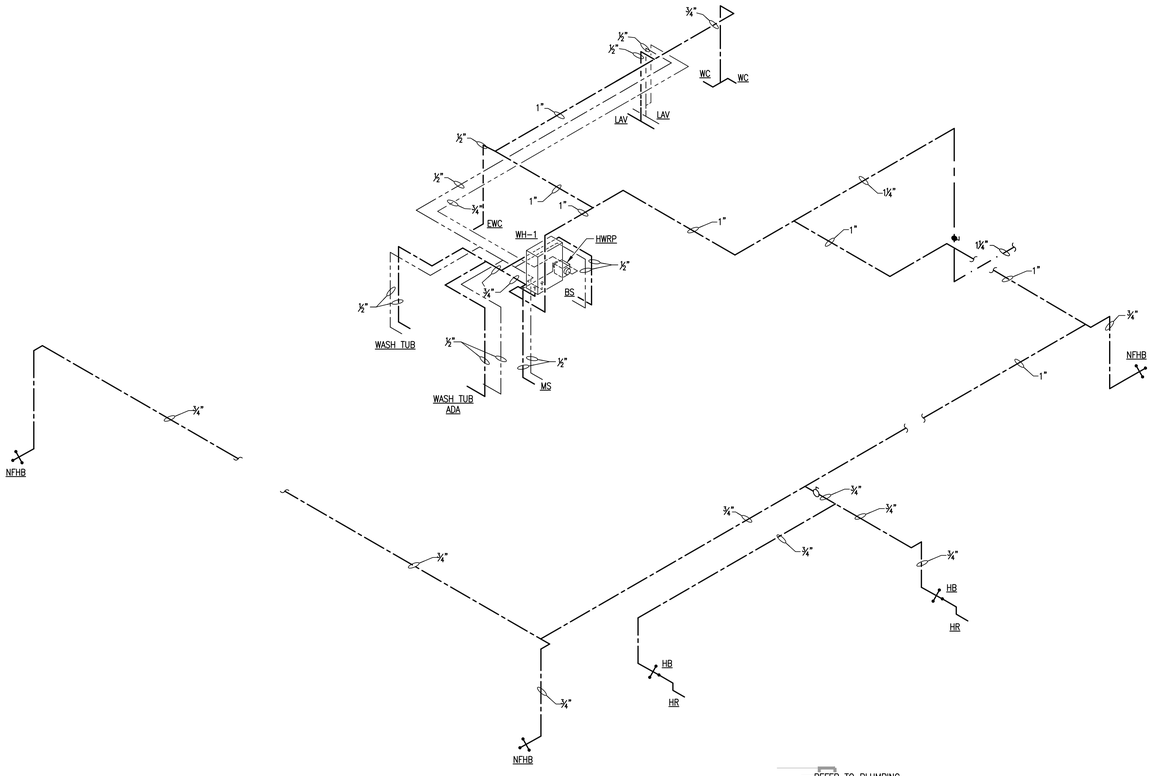

DOMESTIC WATER RISER

NONE SCALE:

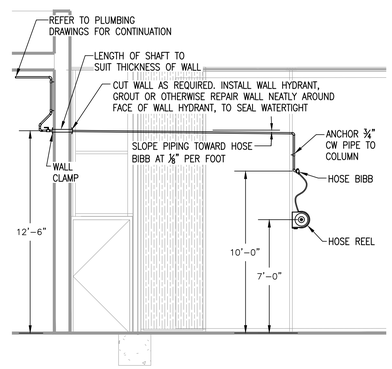

LIVE GOODS CENTER HOSE REEL AND HOSE BIBB SERVICE PIPING DETAIL

SCALE: NONE

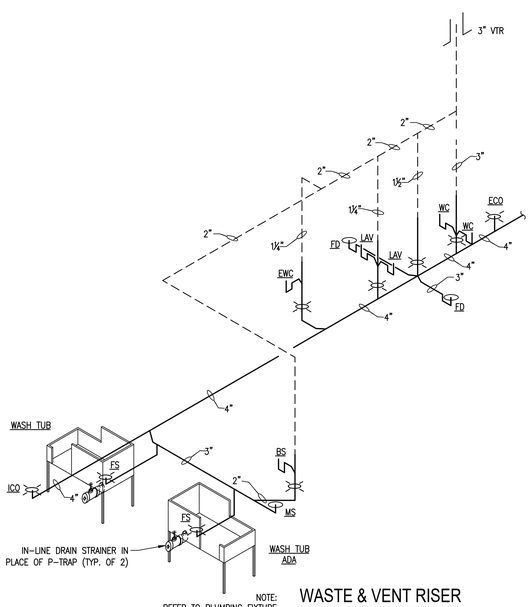

NOTE:
REFER TO PLUMBING FIXTURE SCHEDULE FOR ADDITIONAL PIPE SIZES

WASTE & VENT RISER

NONE SCALE:

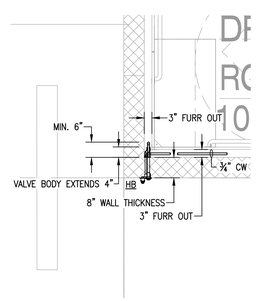

NON-FREEZE WALL HYDRANT AT DRESSING ROOM DETAIL

SCALE: 1/2" = 1'-0"

PLUMBING SPECIFICATIONS

PART 1 GENERAL

1. COMPLETED INSTALLATION SHALL CONFORM TO ALL APPLICABLE FEDERAL, STATE AND LOCAL CODES AND ORDINANCES, INCLUDING BUT NOT LIMITED TO THE LATEST APPROVED EDITIONS OF THE FOLLOWING:

   STATE BUILDING CODE, INTERNATIONAL BUILDING CODE, INTERNATIONAL PLUMBING CODE, INTERNATIONAL ENERGY CONSERVATION CODE, NFPA-90A, NFPA-101, NFPA-54.

2. OBTAIN AND PAY FOR ALL REQUIRED PERMITS, INSPECTION FEES, TAPPING FEES, CONNECTION CHARGES, AND UTILITY COMPANY SERVICE CHARGES.

3. INSTALLATION SHALL BE DONE IN A NEAT AND WORKMANLIKE MANNER.

4. IT IS THE RESPONSIBILITY OF THE CONTRACTOR TO PROVIDE ALL LABOR AND INSTALL ALL MATERIAL CALLED FOR IN THE CONTRACT DOCUMENTS PER LOCAL CODE REQUIREMENT AND THE MANUFACTURER'S INSTALLATION INSTRUCTIONS.

5. THE CONTRACTOR'S INSTALLATION SHALL INCLUDE ALL REQUIRED ROUGH-INS, DUCTWORK, PIPING OR ELECTRICAL WIRING INCLUDING DEVICES (GAGES, VALVES, DISCONNECTS, STARTERS, ETC.) NEEDED FOR ALL SYSTEMS TO BE COMPLETE AND FULLY OPERATIONAL WHETHER OR NOT SHOWN OR NOTED ON THE CONTRACT DOCUMENTS.

6. THE CONTRACTOR'S BID SHALL INCLUDE ALL SUCH ITEMS REASONABLY INFERRED OR REQUIRED FOR COMPLETE SYSTEMS. THE CONTRACTOR SHALL NOTIFY THE DESIGN ENGINEER PROMPTLY OF ANY CONFLICT BETWEEN BUILDING CODES AND/OR THE MANUFACTURER'S INSTALLATION INSTRUCTIONS AND THE CONTRACT DOCUMENTS.

7. NO DEVIATIONS OR ADJUSTMENTS SHALL BE MADE TO THE CONTRACT DOCUMENTS WITHOUT COORDINATION AND THE APPROVAL OF THE DESIGN ENGINEER. ANY SUCH APPROVED DEVIATIONS OR ADJUSTMENTS TO THE CONTRACT DOCUMENTS SHALL BE MARKED ON A SET OF RECORD DRAWINGS BY THE CONTRACTOR. THE RECORD AS-BUILT DRAWINGS SHALL BE TURNED OVER TO THE DESIGN ENGINEER AT THE COMPLETION OF CONSTRUCTION.

PART 2 PRODUCTS

1. ALL PIPING AND FITTINGS FOR THE DOMESTIC WATER SYSTEM SHALL BE CERTIFIED BY THE UNDERWRITERS LABORATORY TO MEET THE ANSI NSF, 61 SECTION 9 STANDARD.

2. ALL PIPING INSIDE THE BUILDING AND BELOW SLAB TO 5'-0" OUTSIDE THE BUILDING SHALL BE ASTMF876 APPROVED CROSSLINKED POLYETHYLENE (PEX) TUBING WITH A MINIMUM CLASS 1006 CHLORINE RESISTANCE RATING, WATTS, ZURNER, OR NIBCO. FITTINGS SHALL BE BARBED CRIMP PIPING OR QUICK CONNECT FITTINGS, WATTS, ZURNER, OR NIBCO. EXPOSED PIPING INSIDE SHALL BE 10' OR 20' STICKS. ROLLS MAY BE USED IN WALLS NOT EXPOSED AND UNDERSLAB. ALL PIPING (PEX) UNDER INTERIOR SLAB SHALL BE SLEEVED. NO FITTINGS SHALL BE PERMITTED UNDER GROUND.

   OR

   ALL DOMESTIC WATER PIPING INSIDE THE BUILDING ABOVE SLAB SHALL BE TYPE "L" HARD COPPER. DOMESTIC WATER PIPING BELOW SLAB AND TO 5'-0" OUTSIDE SHALL BE TYPE "K" SOFT SEAMLESS. NO JOINTS SHALL BE ALLOWED BELOW SLAB. COPPER PIPE FITTINGS SHALL BE SWEATED JOINT WROUGHT COPPER SWEEP PATTERN FITTINGS, SOLDERED USING 95-5 LEAD-FREE SOLDER.

3. ALL SANITARY WASTE AND VENT PIPING INSIDE AND UNDERSLAB TO 5'-0" OUTSIDE THE BUILDING SHALL BE SCHEDULE 40 PVC, DWV OR SERVICE WEIGHT CAST IRON WITH DRAINAGE FITTINGS.

4. JOINT FOR PVC SANITARY WASTE AND VENT PIPING SHALL BE SOLVENT WELD TYPE INSIDE AND UNDERSLAB TO 5'-0" OUTSIDE THE BUILDING. JOINTS FOR CAST IRON PIPE SHALL BE NO-HUB TYPE ABOVE, SLAB ON GRADE AS MANUFACTURED BY CLAMP-ALL OR ANACO HUSKY. CAST IRON SOIL PIPING INSTITUTE NO-HUB, DOUBLE BAND CONNECTORS SHALL NOT BE ALLOWED. JOINTS FOR CAST IRON PIPE BELOW SLAB OR GRADE SHALL BE NEOPRENE PUSH-ON TYPE.

5. HANGERS: PIPE SIZES 1/2" TO 1-1/2": ADJUSTABLE WROUGHT STEEL LOOP (COPPER, ELECTROPLATE IF APPLICABLE).

6. HANGERS: PIPE SIZES 2" AND UP: ADJUSTABLE WROUGHT STEEL CLEVIS (COPPER, ELECTROPLATE IF APPLICABLE).

7. MULTIPLE OR TRAPEZE HANGERS: STEEL CHANNELS WITH WELDED SPACERS AND HANGER RODS.

8. PROVIDE STEEL HANGER RODS, THREADED BOTH ENDS, THREADED ONE END, OR CONTINUOUS THREADED AS REQUIRED.

9. INSULATE DOMESTIC HOT AND COLD WATER PIPING WITH FIBERGLASS INSULATION WITH MOLDED FIBERGLASS PIPE COVERING AND CONTINUOUS VAPOR AS MANUFACTURED BY MANVILLE CORPORATION, OWENS-CORNING, KNAUF, OR CERTAINTEED.

   OR

   INSULATE (PEX) PIPING WITH SELF SEALING ELASTOMERIC RUBBER INSULATION. SEAL ENDS WITH CONTACT ADHESIVE AND TAPE PER MANUFACTURER'S RECOMMENDATIONS.

10. INSULATE ALL DOMESTIC HOT WATER PIPING WITH 1" THICK INSULATION. INSULATE ALL DOMESTIC COLD WATER PIPING WITH 1/2" THICK INSULATION.

11. INSULATE ALL DOMESTIC WATER PIPING BELOW SLAB AND TO 5'-0" OUTSIDE THE BUILDING WITH 1/2" ARMAFLEX.

12. PIPE INSULATION AND COVERINGS SHALL HAVE A RATING OF NO GREATER THAN 25 FLAME SPREAD, NO HIGHER THAN 50 SMOKE DEVELOPED, AND NO MORE THAN 50 FUEL CONTRIBUTED.

13. ALL GAS PIPING SHALL BE SCHEDULE 40 BLACK STEEL WITH SCREWED OR WELDED FITTINGS AND GASKET TYPE UNIONS AND FLANGES. ALL GAS PIPING INSTALLED OUTDOORS SHALL BE COATED WITH A CORROSION RESISTANT PAINT. PAINT COLOR SHALL BE ORANGE OR YELLOW.

14. CONCRETE ANCHORS (WEDGE ANCHORS) SHALL BE ZINC-PLATED CARBON STEEL WEDGE ANCHORS AVAILABLE IN ANCHOR/DRILL SIZES 1/4" TO 3/4" AND LENGTHS OF 1-3/4" THROUGH 12", MEETING U.S. GOVERNMENT G.S.A. SPECIFICATIONS FF-S-325 GROUP II, TYPE 4, CLASS I, FOR FASTENING PLUMBING SYSTEMS TO CONCRETE AND PIPE HANGING. ITW RAMSET/RED HEAD BRAND OR APPROVED EQUAL.

15. NATURAL GAS REGULATORS SHALL BE MAXITROL 325 SERIES OR EQUAL.

16. ACCEPTABLE FIXTURE MANUFACTURERS

    A. NO OTHER MANUFACTURER SUBSTITUTIONS SHALL BE ALLOWED WITHOUT PRIOR WRITTEN APPROVAL FROM THE ENGINEER FIVE (5) DAYS BEFORE BIDDING.

    B. CONTRACTOR SHALL PROVIDE FAUCETS AND FITTINGS THAT ARE CERTIFIED BY UNDERWRITERS LABORATORY TO MEET THE ANSI NSF 61, SECTION 9 STANDARD.

    C. FITTINGS: AMERICAN STANDARD, KOHLER, DELTA, MOEN, SYMMONS, LEONARD, CHICAGO FAUCET COMPANY, T&S BRASS, OR POWERS REGULATOR.

PART 3 EXECUTION

1. EXCAVATION, BACKFILLING AND TRENCH WORK SHALL BE DONE IN ACCORDANCE WITH O.S.H.A. AND EXISTING SAFETY STANDARDS.

   A. PROVIDE SHORING AND CLEANING NECESSARY TO KEEP TRENCHES IN WORKING CONDITIONS, INCLUDING PUMPING OUT WATER.

   B. IN MOSTLY ROCK MATERIAL, TRENCHES SHALL BE EXCAVATED TO AT LEAST 6" BELOW THE ELEVATION OF THE BOTTOM OF THE PIPES. AFTER EXCAVATION, TRENCH SHALL THEN BE FILLED TO THE PROPER ELEVATION WITH CRUSHED LIMESTONE. GRAVEL SHALL BE SCOOPED OUT UNDER PIPE BELLS SO THE PIPE RESTS FIRMLY ON THE TRENCH BOTTOM.

   C. IN MOSTLY EARTH OR SAND MATERIAL, THE LAST 6" OF EXCAVATION SHALL BE DONE BY HAND. TRENCH BOTTOM SHALL BE SCOOPED OUT AT PIPE BELLS SO THE PIPE RESTS FIRMLY ON THE TRENCH BOTTOM.

   D. BACKFILLING AND TAMPING SHALL BE CAREFULLY DONE SIMULTANEOUSLY ALONG BOTH SIDES OF THE PIPE USING ROCK FREE EARTH, CRUSHED STONE OR SAND UNTIL THE PIPE IS COVERED TO A DEPTH OF AT LEAST 12". THE REST OF THE FILL UP TO THE TOPSOIL LAYER MAY BE GRAVEL OR ROCK FREE EARTH. ACCEPTABLE SOIL MATERIALS FOR BACKFILL AND FILL SHALL BE FREE OF CLAY, ROCK OR GRAVEL LARGER THAN 2" IN ANY DIMENSION, DEBRIS: WASTE, FROZEN MATERIALS AND OTHER DELETERIOUS MATTER HAVING A PLASTICITY INDEX LESS THAN 30. BACKFILL SHALL BE DONE IN LAYERS OF NOT MORE THAN 8" AND EACH LAYER SHALL BE COMPACTED. THE LAST 12" OF BACKFILL SHALL BE ROCK FREE TOPSOIL.

   E. SURFACE SHALL BE RESTORED TO ITS ORIGINAL CONDITION.

2. EXPOSED HOT AND COLD WATER TRIM IN FINISHED AREAS SHALL BE CHROME FINISHED.

3. ALL HORIZONTAL AND VERTICAL PIPING SHALL BE SUPPORTED IN ACCORDANCE WITH APPLICABLE STATE AND LOCAL CODE RECOMMENDATIONS. SUPPORTS SHALL SECURELY HOLD PIPING, PREVENT VIBRATION, COMPENSATE FOR ALL STATIC AND OPERATIONAL CONDITIONS OF THE VARIOUS SYSTEMS AND SHALL NOT BE SUBJECT TO ELECTROLYTIC ACTION. THIS SHALL BE ACCOMPLISHED BY USING THE SUMMER SYSTEM, THE POSIFIX, STAKFIX, PIPEFIX OR CHANNEL.

4. WATER HAMMER ARRESTERS SHALL BE INSTALLED ON ALL HOT AND COLD WATER BRANCH LINES CONTAINING SINGLE LEVER FAUCETS, FLUSH VALVES OR QUICK CLOSING VALVES SUCH AS DISHWASHERS, CLOTHES WASHERS, AND OTHER EQUIPMENT, BETWEEN THE LAST TWO FIXTURES. SHOCK ABSORBERS SHALL BE MOUNTED IN THEIR VERTICAL POSITION.

5. SANITARY WASTE AND VENT PIPING SHALL BE UNIFORMLY GRADED TO ELEVATIONS SHOWN. IF NO ELEVATIONS ARE GIVEN, SEWERS SHALL BE PITCHED NOT LESS THAN 1/4" PER FOOT FOR ALL PIPING 3" IN DIAMETER AND SMALLER AND 1/8" PER FOOT FOR PIPE LARGER THAN 3" IN DIAMETER.

6. SUPPORT HORIZONTAL PIPING AS FOLLOWS: REFER TO IPC 2009 TABLE 308.5 FOR HANGER SPACING REQUIREMENTS.

MAXIMUM NOMINAL PIPE SIZE (IN.)	HANGER ROD DIAMETER (IN.)
1/2	3/8
3/4 TO 1-1/4	3/8
1-1/2 TO 2	3/8
2-1/2 TO 3	1/2
4	5/8
6	3/4
8 AND UP	7/8

7. HANGERS FOR PIPING GREATER THAN 1" SHALL PASS OVER THE INSULATION. PROVIDE SADDLES FOR INSULATED PIPING.

8. HANGERS SHALL BE ATTACHED TO STRUCTURAL STEEL WORK BY CLAMPING OR OTHER APPROVED METHODS, EXCEPT THAT STRUCTURAL WORK SHALL NOT BE DRILLED AND PUNCHED.

9. INSULATION SHALL BE APPLIED WITH JOINTS TIGHTLY BUTTED. OPEN CRACKS, VOIDS AND DEPRESSIONS SHALL BE FILLED WITH HYDRAULIC SETTING CEMENT AND LAPPING MATCHING THE FINISH SHALL BE PASTED NEATLY OVER JOINTS.

10. FITTINGS AND VALVES SHALL BE INSULATED WITH THE SAME TYPE INSULATION AS THE PIPING OR WITH HYDRAULIC SETTING CEMENT, BUILT UP TO THE SAME THICKNESS AS LINES. COVER SHALL BE SAME AS ADJACENT PIPING OR PVC PREFORMED JACKET.

11. PROVIDE AND INSTALL A CUT-OFF VALVE, UNION AND FULL SIZE DIRT LEG AT CONNECTION TO EACH GAS-FIRED PIECE OF EQUIPMENT.

12. SEAL ALL PENETRATIONS OF RATED PARTITIONS WITH U.L. RATED FIRE BARRIER MATERIAL.

13. AIR ADMITTANCE VALVES SHALL NOT BE ALLOWED ON SANITARY WASTE AND VENT SYSTEMS.

14. THE SYSTEM TESTS DESCRIBED HEREIN ARE MINIMUM REQUIREMENTS. HOWEVER, ADDITIONAL TESTS AS REQUIRED BY THE AUTHORITY HAVING JURISDICTION SHALL ALSO BE PERFORMED.

15. DOMESTIC WATER PIPING SHALL BE TESTED AT 125 PSI. IN ADDITION, PIPING SHALL BE TESTED IN ACCORDANCE WITH APPLICABLE CODE REQUIREMENTS.

16. THE DOMESTIC WATER SYSTEM SHALL BE FLUSHED OUT PROGRESSIVELY BY OPENING OUTLETS AND FLOWING WATER UNTIL IT RUNS CLEAR. AFTER PIPE CLEANING IS COMPLETED, THE STRAINERS SHALL BE REMOVED, CLEANED, AND REPLACED. THEN THE ENTIRE DOMESTIC WATER SYSTEM SHALL BE DISINFECTED IN ACCORDANCE WITH THE AUTHORITY HAVING JURISDICTION.

17. THE SANITARY WASTE SYSTEM SHALL BE FLUSHED OUT PROGRESSIVELY WITH FLOWING WATER UNTIL IT RUNS CLEAR.

18. THE ENTIRE SANITARY WASTE SYSTEM SHALL BE TESTED AGAINST A HEAD PRESSURE OF 10' TSH FOR 8 HOURS WITHOUT LEAKAGE.

19. GAS PIPING SHALL BE LEAK TESTED AT 30 PSI FOR 24 HOURS.

20. THE CONTRACTOR SHALL SUBMIT TO THE ENGINEER A LETTER STATING THAT THE ABOVE MENTIONED TESTING, CLEANING AND DISINFECTING WAS COMPLETED, AND ALL LEAKS (IF ANY) WERE REPAIRED AND SYSTEM CLEANED AND RETESTED. THE LETTER SHALL BE SIGNED AS WITNESSED BY THE LOCAL AUTHORITY HAVING JURISDICTION, THE GENERAL SUPERINTENDENT OR THE DESIGN ENGINEER.

21. FIXTURES SHALL BE MOUNTED RIGID TO WALLS AND FLOOR.

22. PROVIDE HEAT TRAPS ON INLET AND OUTLET OF ALL WATER HEATING STORAGE TANKS.

23. DRAIN MANAGEMENT PROGRAM:

    A. ALL DRAINS, VENTS, ETC. MUST BE TAPED OVER DURING CONSTRUCTION TO PREVENT DEBRIS FROM INFILTRATING THE LINES.

    B. GC/DEVELOPER IS REQUIRED TO SUBMIT PHOTOS OF TAPED DRAINS.

    C. GC WILL BE FINED $150 PER DAY IF PHOTOS ARE NOT SUBMITTED BY THE BEGINNING OF WEEK TWO OF THE PROJECT OR IF ANY DRAIN IS DISCOVERED TO BE UNCOVERED DURING A PM SITE VISIT. FINES WILL TERMINATE ON THE DAY THAT PHOTOGRAPHIC EVIDENCE OF COMPLETION IS SUBMITTED TO AND VERIFIED BY THE TRACTOR SUPPLY PM.

    D. GC/DEVELOPER WILL BE REQUIRED TO JET AND CAMERA ANY LINE IN WHICH THE DRAIN IS DISCOVERED TO BE UNCOVERED. RECEIPTS AND VIDEO MUST BE SUBMITTED TO TRACTOR SUPPLY FOR VERIFICATION.

    E. DRAIN MANAGEMENT SIGNAGE WILL BE PROVIDED BY TRACTOR SUPPLY AND INSTALLED BY THE GC/DEVELOPER.

    F. IF SIGNAGE IS NOT INSTALLED AT PUNCH, CLEANING/CAMERA POLICY WILL APPLY.

    G. GC WILL BE FINED $150 PER DAY IF SIGNAGE IS NOT INSTALLED AT PUNCH. FINES WILL TERMINATE ON THE DAY THAT PHOTOGRAPHIC EVIDENCE OF COMPLETION IS SUBMITTED TO AND VERIFIED BY TRACTOR SUPPLY PM.

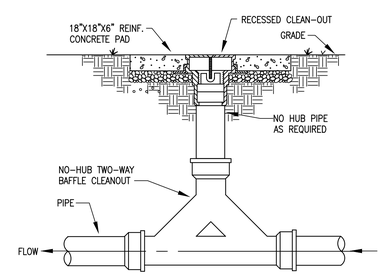

EXTERIOR TWO-WAY CLEAN-OUT SCHEMATIC

SCALE: NONE

OXFORD ARCHITECTURE

2934 Sidco Drive
Suite 120
Nashville, TN 37204

Architecture
Planning
Interior Architecture

Schelton ENGINEERING
1163 West Main St.
Franklin, TN 37064
Tel: 615.730.9111 / Fax: 615.224.3599
gary@scheltonengineering.com
Project #24-077

TSC
TRACTOR SUPPLY COMPANY

BOUTTE, LOUISIANA

Tractor Supply Company shall not be responsible for the payment of any work performed or material supplied by the Contractor or any of its sub-contractors, sub-subcontractors and anyone claiming by through or under any of them which is not identified in writing and signed by one of the following Tractor Supply Company personnel: Vice President Real Estate, Director of Construction, or a Construction Project Manager. No action, conduct, omission, prior failure, or course of dealing by Tractor Supply Company shall act to waive, modify, change or alter the requirement that all work, whether by contract, change order or change directive, must be in writing and signed by the personnel identified in this provision. Any work performed or material provided by the Contractor, any of its sub-contractors, sub-subcontractors contrary to this provision shall be at its own risk and own expense and Tractor Supply Company shall not be obligated to reimburse or pay the Contractor or any of its sub-contractors, sub-subcontractors for same.

All measurements and items portrayed on this sheet are deemed to be accurate by architect, however all bidding General Contractors should field verify the actual conditions. Any changes to the scope of work, and thus potential change orders, should be identified and communicated in your bid submittal to TSC.

This drawing and the design shown is the property of the architect. The reproduction, copying or use of this drawing without their written consent is prohibited and any infringement will be subject to legal action

Job Number: 2428

Date: 07.23.2024

Revisions:

Revisions:

Revisions:

PLUMBING RISERS AND SPECIFICATIONS

Sheet Number: P3.0

SPRINKLER INTENT INFORMATION

	SALES AREA	OFFICE AREA AND PET WASH	STOCKROOM AREA
ZONE CLASSIFICATION **	ORDINARY HAZARD GROUP 2	LIGHT HAZARD	MISCELLANEOUS STORAGE <12', CLASS III COMMODITIES * ORDINARY HAZARD GROUP 2
DENSITY	.20 GPM/ SQ. FT.	.10 GPM/ SQ. FT.	.20 GPM/ SQ. FT.
COVERAGE AREA	1500 SQ. FT.	1500 SQ. FT.	1500 SQ. FT.
COVERAGE PER SPRINKLER	130 SQ. FT.	225 SQ. FT.	130 SQ. FT.
DISCHARGE TEMPERATURE	165°F	165°F	165°F
MAXIMUM HEAD SPACING	15 FT.	15 FT.	15 FT.
HOSE STREAM ALLOWANCE	250 GPM	100 GPM	250 GPM

COMMENTS:

* COMMODITY CLASS REDUCED TO CLASS III BASED ON STORAGE OF LESS THAN 10 PALLET OF CLASS IV COMMODITIES.

** ZONE CLASSIFICATION SUBJECT TO AUTHORITY HAVING JURISDICTION.

SPRINKLER LEGEND

SYMBOL	DESCRIPTION
	RECESSED CHROME PENDANT HEAD (165°F)
	UPRIGHT HEAD (165°)
	CHROME PENDANT HEAD (165°)
	RECESSED PENDANT HEAD (200°)
	SIDEWALL HEAD (200°)
	SPRINKLER RISER
FE	FIRE EXTINGUISHER

GENERAL NOTES

1. TSC TO FURNISH AND CONTRACTOR TO INSTALL MINIMUM OF 10 PORTABLE FIRE EXTINGUISHERS. LOCATIONS SHALL BE DETERMINED BY STORE FIXTURES AND SHELVING TO MAINTAIN A MAXIMUM TRAVEL DISTANCE OF 75'–0".
2. SPRINKLER LINES, MAINS, AND BRANCHES SHALL BE AS HIGH AS POSSIBLE IN STOCKROOM.
3. TSC IS TO APPROVE ALL SPRINKLER DRAWINGS PRIOR TO INSTALLATION.
4. FIRE SPRINKLER CONTRACTOR SHALL BE RESPONSIBLE FOR SUBMITTING FORMAL "DESIGN INTENT" DRAWINGS INCLUDING FULL HYDRAULIC CALCULATIONS, SEALED BY A PROFESSIONAL ENGINEER MEETING ALL STATE AND LOCAL CODE REQUIREMENTS.
5. FIRE EXTINGUISHERS SHALL BE UL & ULC RATED AT 2A:10B:C OR BETTER.

FIRE PROTECTION SPECIFICATIONS

1. THE SPRINKLER SYSTEM SHALL CONFORM TO NATIONAL FIRE PROTECTION ASSOCIATION 13 AND ALL APPLICABLE REGULATORY REQUIREMENTS AND BUILDING CODES AS INTERPRETED BY THE AUTHORITY HAVING JURISDICTION IN THE LOCALE OF THE PROJECT. WHERE CONFLICTS EXIST BETWEEN SUCH REGULATORY OR CODE REQUIREMENTS, SUCH CONFLICT SHALL BE IDENTIFIED FOR THE REVIEW OF THE ARCHITECT AND ENGINEER.
2. CONTRACTOR SHALL FURNISH AND INSTALL A COMPLETE AND HYDRAULICALLY CALCULATED SPRINKLER SYSTEM AS INDICATED ON FLOOR PLANS. MINIMUM SCOPE OF WORK SHALL INCLUDE PROVIDING NEW PENDANT SPRINKLER HEADS AND/OR RELOCATING EXISTING SPRINKLER HEADS AS REQUIRED IN THE VESTIBULE, SALES AREA, TOILETS, OFFICES, AND BREAKROOM. RELOCATE EXISTING UPRIGHT SPRINKLER HEADS OR PROVIDE NEW SPRINKLER HEADS AS REQUIRED IN THE STOCK ROOM. PROVIDE BRANCH PIPING FOR ALL NEW SPRINKLER HEADS AND ROUTE PIPING TO NEAREST BRANCH MAIN OR CROSS MAIN. PROVIDE SUPPORTS AS REQUIRED By NFPA 13. FIELD VERIFY EXISTING CONDITIONS.
3. CONTRACTOR SHALL BE RESPONSIBLE FOR ALL DEFECTS, REPAIRS AND REPLACEMENTS IN MATERIAL AND WORKMANSHIP FOR A PERIOD OF ONE (1) YEAR AFTER FINAL PAYMENT IS APPROVED.
4. SUBMIT FOR APPROVAL THE NUMBER OF SHOP DRAWINGS AND MANUFACTURERS LITERATURE ON ALL MATERIALS AS REQUIRED TO THE ARCHITECT OR OWNER'S REPRESENTATIVE.
5. SUBMIT DRAWINGS AND CALCULATIONS TO THE DEPARTMENT OF FIRE PREVENTION OF THE STATE AND LOCAL AUTHORITIES HAVING JURISDICTION.
6. CONTRACTOR SHALL VISIT THE SITE AS WELL AS ADJACENT SPACES AND FULLY INFORM HIMSELF CONCERNING ALL CONDITIONS AFFECTING SCOPE OF WORK. VERIFY PIPE SIZES, LOCATION OF EXISTING COMPONENTS, AND SUITABILITY OF THE EXISTING SYSTEMS TO MEET THE HYDRAULIC CALCULATIONS PRIOR TO BID.
7. DRAWINGS ARE DIAGRAMMATIC AND INTENDED TO SHOW APPROXIMATE LOCATIONS. IT IS THE RESPONSIBILITY OF THE CONTRACTOR TO REVIEW ALL ARCHITECTURAL, CIVIL, STRUCTURAL, ELECTRICAL, AND MECHANICAL DRAWINGS AND COORDINATE WITH OTHER TRADES FOR PIPE ROUTING AND EQUIPMENT PLACEMENT. INSTALL ALL WORK WITHOUT CONFLICT WITH OTHER TRADES AND MAKE MINOR ALTERATIONS AS REQUIRED WITHOUT ADDITIONAL COST TO OWNER.
8. THE SPRINKLER SYSTEM SHALL BE INSTALLED BY A FIRE PROTECTION SPRINKLER SYSTEM CONTRACTOR WITH A VALID CERTIFICATE OF REGISTRATION ISSUED BY THE AUTHORITY HAVING JURISDICTION.
9. CONTRACTOR SHALL COORDINATE WITH ELECTRICAL CONTRACTOR ALL VOLTAGES, ELECTRICAL LOADS, ETC. OF ELECTRICALLY OPERATED EQUIPMENT PRIOR TO PURCHASING EQUIPMENT. ALL EQUIPMENT SHALL BE U.L. AND NEMA APPROVED.
10. MAINTAIN A MINIMUM CLEARANCE OF 3'–0" IN FRONT OF ALL ELECTRICAL PANELS AND 1'–0" ON EITHER SIDE OF ELECTRICAL PANEL TO STRUCTURE.
11. ALL HORIZONTAL AND VERTICAL PIPING SHALL BE SUPPORTED IN ACCORDANCE WITH NFPA 13 AND STATE AND LOCAL REQUIREMENTS. SUPPORTS HALL SECURELY HOLD PIPING, PREVENT VIBRATION, COMPENSATE FOR STATIC AND OPERATIONAL CONDITIONS OF THE VARIOUS SYSTEMS, AND SHALL NOT BE SUBJECT TO ELECTROLYTIC ACTION.
12. ALL SPRINKLER SYSTEM MATERIALS INSTALLED SHALL BE U.L. LISTED AND FACTORY MUTUAL APPROVED FOR FIRE PROTECTION USE.
13. CONTROL VALVES SHALL BE SLOW CLOSING INDICATING VALVES LISTED FOR FIRE PROTECTION USE. EACH CONTROL SHALL HAVE A SUPERVISORY SWITCH.
14. SPRINKLER PIPING PENETRATING ONE–HOUR OR GREATER RATED FIRE WALLS SHALL BE SLEEVED AND CAULKED TO MEET U.L. LISTED ASSEMBLY FOR RATING OF WALL.
15. CONTRACTOR SHALL FLUSH WATER SYSTEM AFTER INSTALLATION PER REQUIREMENTS OF NFPA 24.
16. SPRINKLER HEADS SHALL BE TYCO, RELIABLE, CENTRAL, VIKING OR EQUAL.
17. OFFICE AREA AND SIMILAR OCCUPANCIES SHALL HAVE DENSITY OF ADJACENT AREAS IF NOT SEPARATED BY WALLS. IF SEPARATED BY WALLS, THE AREA SHALL BE HYDRAULICALLY BALANCED TO PRODUCE 0.1 G.P.M. PER SQUARE FOOT DENSITY OVER THE MOST REMOTE 1,500 SQ. FT., HEAD COVERAGE 225 SQ. FT./HEAD MAXIMUM, USING 165°F HEADS.
18. SALES AREA, VESTIBULE, AND SIMILAR OCCUPANCIES SHALL SHALL BE HYDRAULICALLY BALANCED TO PRODUCE 0.2 GPM PER SQUARE FOOT DENSITY OVER THE MOST REMOTE 1,500 SQ. FT., HEAD COVERAGE 130 SQ. FT./HEAD MAXIMUM, USING 165°F HEADS.
19. RECEIVING AREA AND STOCKROOM SHALL BE HYDRAULICALLY BALANCED TO PRODUCE .20 GPM PER SQUARE FOOT DENSITY OVER THE MOST REMOTE 1,500 SQ. FT., HEAD COVERAGE 130 FT./HEAD MAXIMUM, USING 165°F HEADS.
20. BUILDING AWNING AND CANOPY AREAS SHALL BE HYDRAULICALLY BALANCED TO PRODUCE 0.2 G.P.M. PER SQUARE FOOT DENSITY OVER THE MOST REMOTE 1,500 SQ. FT., HEAD COVERAGE 80 SQ. FT./HEAD MAXIMUM, USING 200°F HEADS.
21. ALL SPRINKLER HEADS IN AREAS WITH FINISHED CEILING SHALL BE CHROME–PLATED RECESSED PENDANT TYPE WITH TEMPERATURE RATING AS CONDITIONS DICTATE. ASSOCIATED SPRINKLER PIPING SHALL BE ENTIRELY CONCEALED.
22. ALL SPRINKLER HEADS IN AREAS WITHOUT FINISHED CEILINGS SHALL BE BRASS UPRIGHT HEADS WITH TEMPERATURE RATING AS CONDITIONS DICTATE. ASSOCIATED SPRINKLER PIPING SHALL BE RUN EXPOSED. DO NOT PAINT HEADS.
23. THE SPRINKLER CONTRACTOR SHALL COORDINATE THE LOCATION OF PIPING AND HEADS WITH LIGHT FIXTURES, DIFFUSERS, DUCTWORK, PLUMBING LINES, ETC. AND MAKE MINOR ADJUSTMENTS IN THE SPRINKLER LAYOUT WHERE REQUIRED OR DEEMED NECESSARY BY THE ARCHITECT.
24. MODIFICATIONS TO THE SPRINKLER SYSTEM SHALL BE IN ACCORDANCE WITH NFPA 13.

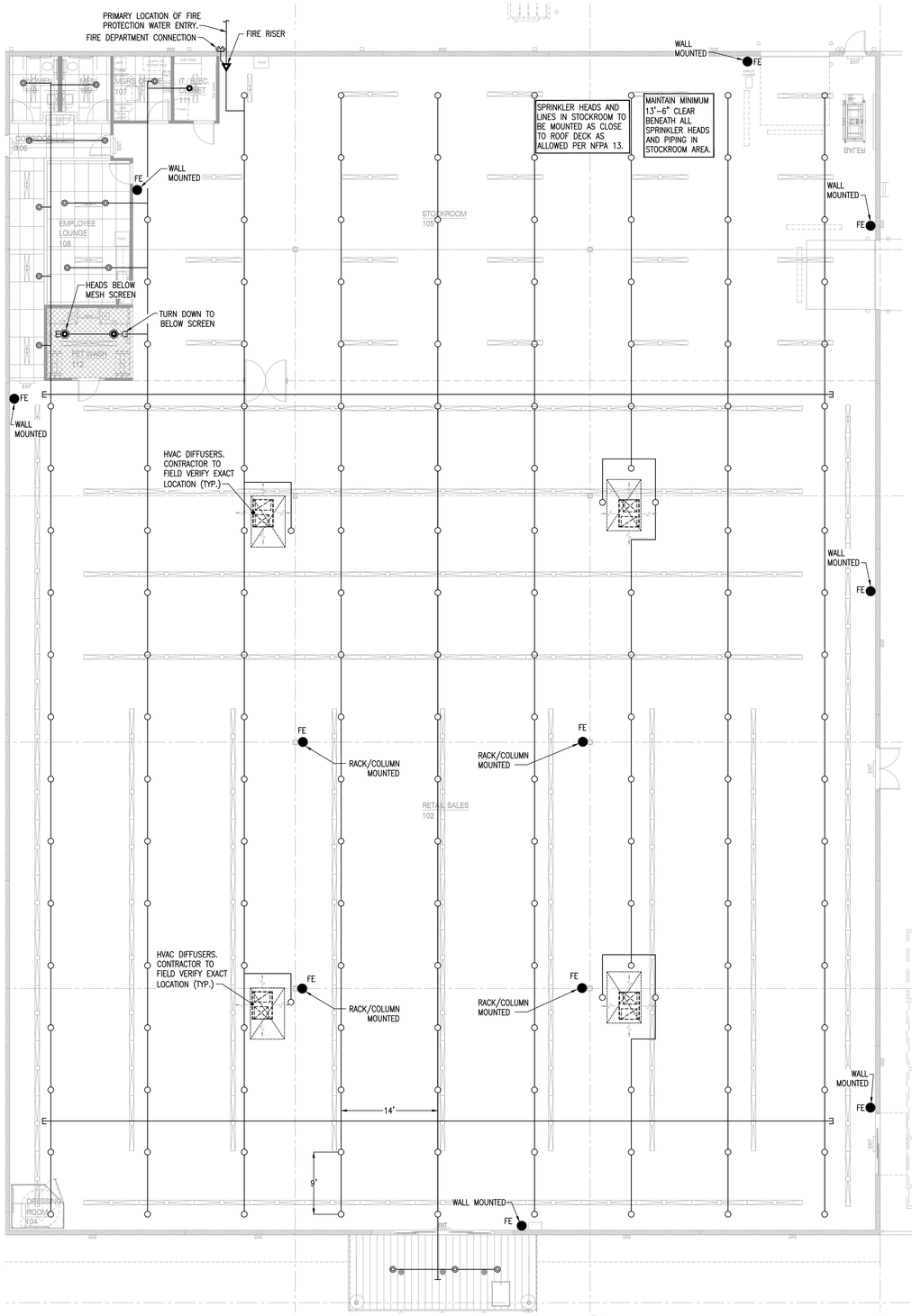

FIRE PROTECTION PLAN

SCALE: 1/8" = 1'–0"

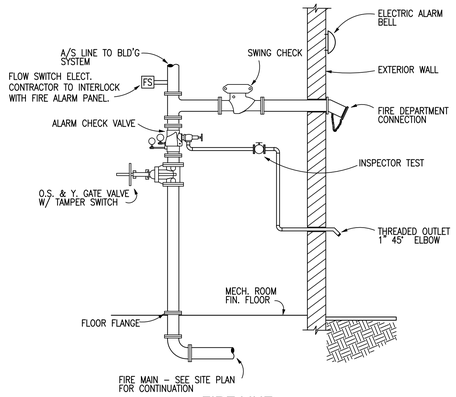

FIRE LINE ENTRANCE DETAIL

SCALE: NONE

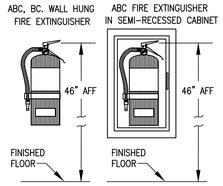

FIRE EXTINGUISHER MOUNTING HEIGHT

SCALE: NONE

OXFORD ARCHITECTURE

2934 Sidco Drive
Suite 120
Nashville, TN 37204

Architecture
Planning
Interior Architecture

Schelton ENGINEERING
1163 West Main St.
Franklin, TN 37064
Tel: 615.730.9111 / Fax: 615.224.3599
gary@scheltonengineering.com
Project #24-077

TSC

TRACTOR SUPPLY COMPANY

BOUTTE, LOUISIANA

Tractor Supply Company shall not be responsible for the payment of any work performed or material supplied by the Contractor or any of its sub–contractors, sub–subcontractors and anyone claiming by through or under any of them which is not identified in writing and signed by one of the following Tractor Supply Company personnel: Vice President Real Estate, Director of Construction, or a Construction Project Manager. No action, conduct, omission, prior failure, or course of dealing by Tractor Supply Company shall act to waive, modify, change or alter the requirement that all work, whether by contract, change order or change directive, must be in writing and signed by the personnel identified in this provision. Any work performed or material provided by the Contractor, any of its sub–contractors, sub–subcontractors contrary to this provision shall be at its own risk and own expense and Tractor Supply Company shall not be obligated to reimburse or pay the Contractor or any of its sub–contractors, sub–subcontractors for same.

All measurements and items portrayed on this sheet are deemed to be accurate by architect, however all bidding General Contractors should field verify the actual conditions. Any changes to the scope of work, and thus potential change orders, should be identified and communicated in your bid submittal to TSC.

This drawing and the design shown is the property of the architect. The reproduction, copying or use of this drawing without their written consent is prohibited and any infringement will be subject to legal action

Job Number: 2428

Date: 07.23.2024

Revisions:

Revisions:

Revisions:

FIRE PROTECTION PLAN

Sheet Number: FP1.0

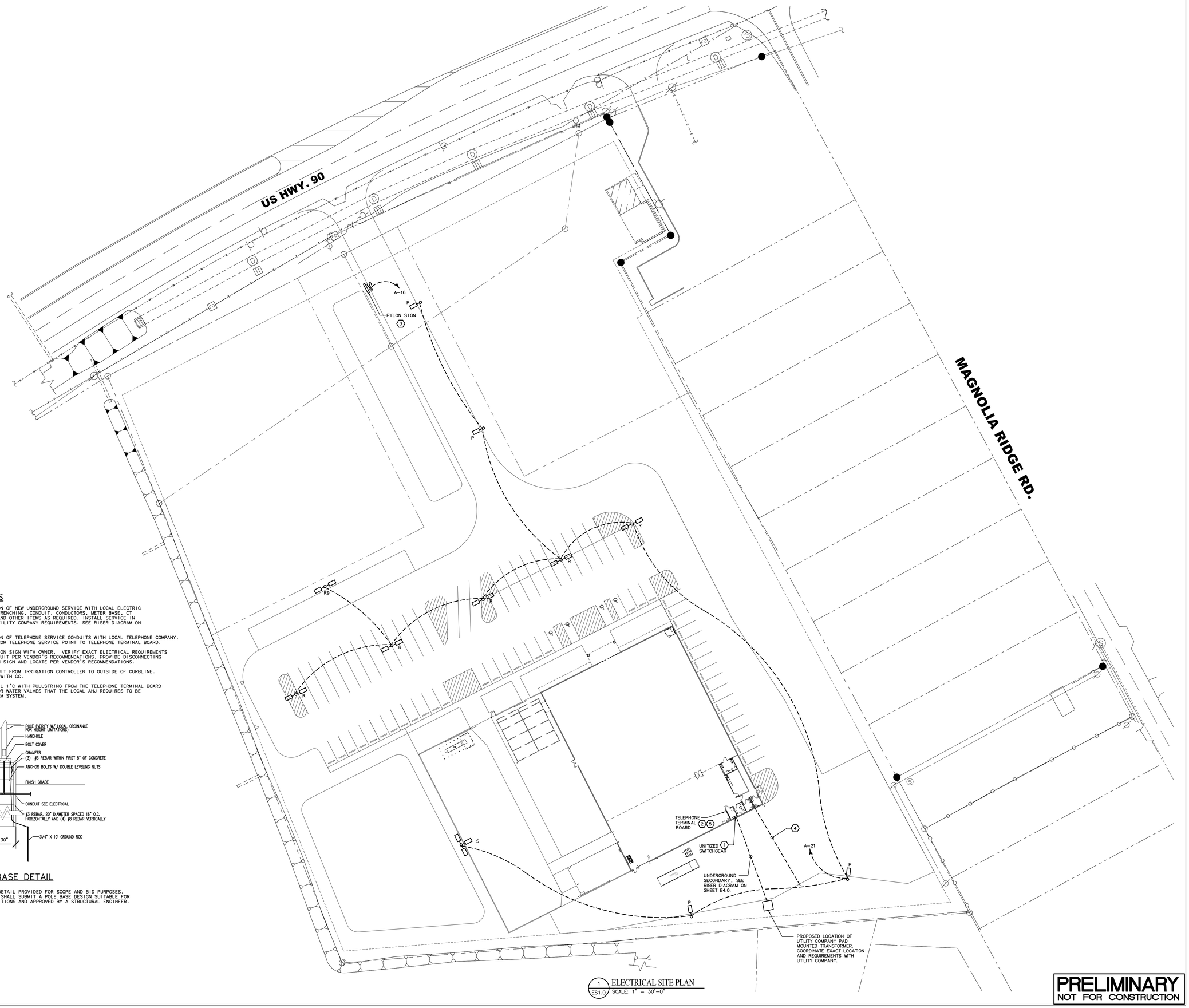

1 ES1.0 ELECTRICAL SITE PLAN
SCALE: 1" = 30'-0"

SITE PLAN NOTES

1. COORDINATE INSTALLATION OF NEW UNDERGROUND SERVICE WITH LOCAL ELECTRIC UTILITY COMPANY. PROVIDE TRENCHING, CONDUIT, CONDUCTORS, METER BASE, CT ENCLOSURE, CONCRETE PAD, AND OTHER ITEMS AS REQUIRED. INSTALL SERVICE IN ACCORDANCE WITH CURRENT UTILITY COMPANY REQUIREMENTS. SEE RISER DIAGRAM ON SHEET E4.0.

2. COORDINATE INSTALLATION OF TELEPHONE SERVICE CONDUITS WITH LOCAL TELEPHONE COMPANY. INSTALL (2) 2" CONDUITS FROM TELEPHONE SERVICE POINT TO TELEPHONE TERMINAL BOARD.

3. VERIFY LOCATION OF PYLON SIGN WITH OWNER. VERIFY EXACT ELECTRICAL REQUIREMENTS WITH VENDOR. PROVIDE CIRCUIT PER VENDOR'S RECOMMENDATIONS. PROVIDE DISCONNECTING MEANS IF NOT PROVIDED WITH SIGN AND LOCATE PER VENDOR'S RECOMMENDATIONS.

4. PROVIDE A 1-1/2" CONDUIT FROM IRRIGATION CONTROLLER TO OUTSIDE OF CURBLINE. COORDINATE EXACT LOCATION WITH GC.

5. CONTRACTOR SHALL INSTALL 1"C WITH PULLSTRING FROM THE TELEPHONE TERMINAL BOARD TO REMOTE PIV, BACKFLOW, OR WATER VALVES THAT THE LOCAL AHJ REQUIRES TO BE MONITORED BY THE FIRE ALARM SYSTEM.

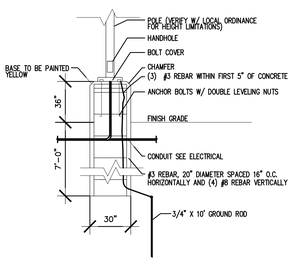

POLE BASE DETAIL

NO SCALE

POLE BASE DETAIL PROVIDED FOR SCOPE AND BID PURPOSES. CONTRACTOR SHALL SUBMIT A POLE BASE DESIGN SUITABLE FOR LOCAL CONDITIONS AND APPROVED BY A STRUCTURAL ENGINEER.

PRELIMINARY
NOT FOR CONSTRUCTION

OXFORD ARCHITECTURE
2934 Sidco Drive
Suite 120
Nashville, TN 37204
Architecture
Planning
Interior Architecture

PARSONS ENGINEERING, INC.
NASHVILLE, TENNESSEE
PARSONSENGINEERING.COM

TRACTOR SUPPLY COMPANY

BOUTTE
LOUISIANA

This drawing and the design shown is the property of the architect. The reproduction, copying or use of this drawing without their written consent is prohibited and any infringement will be subject to legal action

Job Number: 2428

Date: 07.23.2024

Revisions:

Revisions:

Revisions:

ELECTRICAL SITE PLAN

Sheet Number: ES1.0

Project: 24159 Drawing: 24159-ES1.0.dwg

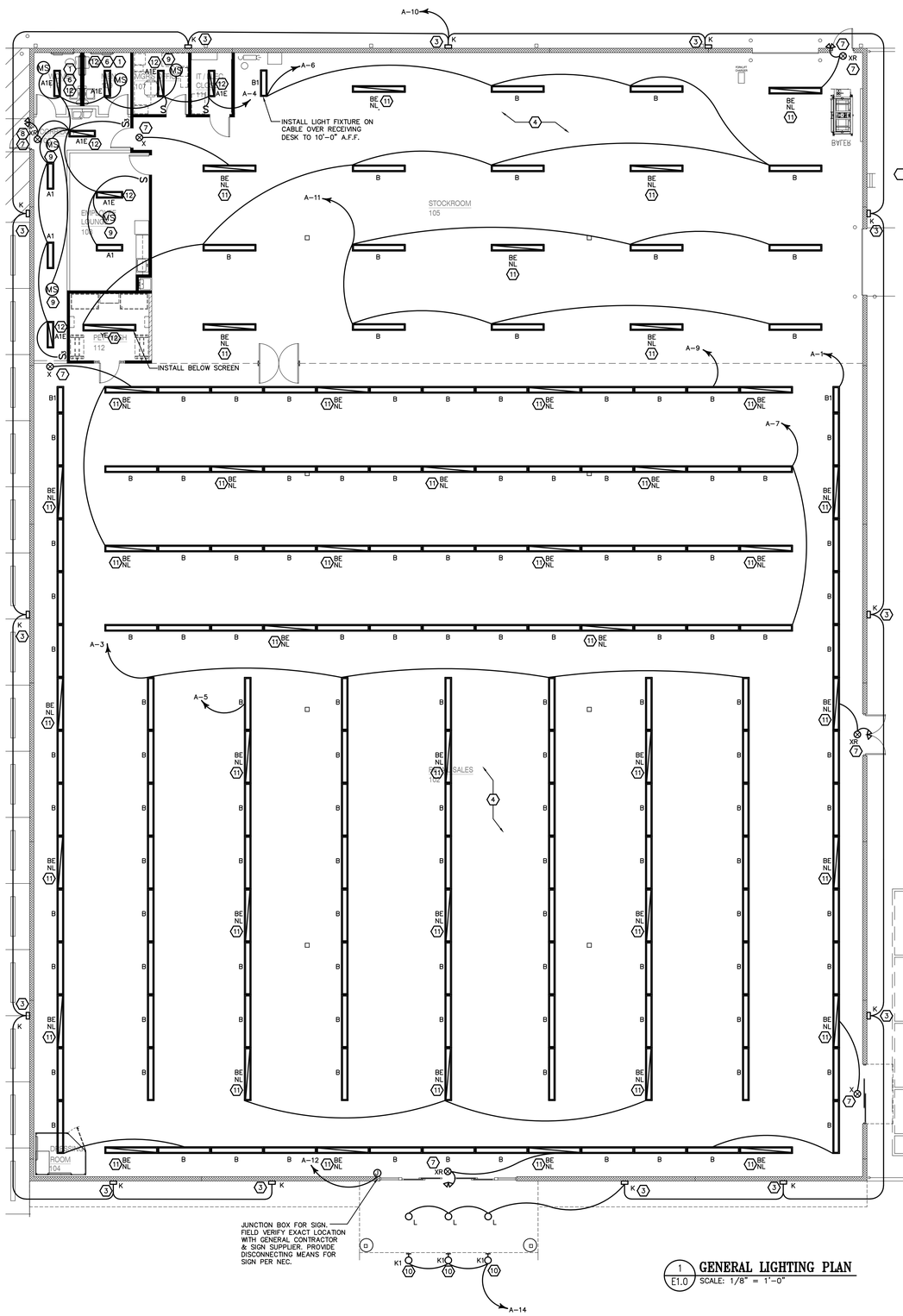

1 E1.0 **GENERAL LIGHTING PLAN**
SCALE: 1/8" = 1'-0"

GENERAL NOTES

A. SUBSTANTIAL COMPLETION MUST BE ACHIEVED ONE WEEK PRIOR TO THE FIXTURE DATE ESTABLISHED BY TSC AND THE G.C. SUBSTANTIAL COMPLETION INCLUDES PERMANENT POWER, SECURE BUILDING READY FOR FIXTURES, COMPLETED OFFICE/RESTROOMS, SALES FLOOR, DOCK WITH ALL WEATHER ACCESS, AND SIDEYARD WITH FENCING.

B. ALL LIGHTING SHALL BE CONTROLLED BY LIGHTING CONTROL SYSTEM EXCEPT THE NIGHT LIGHTS(NL) AND EMERGENCY LIGHTING. ALL NIGHT LIGHTS(NL) AND EMERGENCY LIGHTING SHALL BE UNSWITCHED.

C. UNLESS NOTED OTHERWISE, FIXTURES WITH EMERGENCY BATTERY PACKS SHALL HAVE CONNECTION TO LOCAL SWITCHING (WHERE INDICATED) AND CONNECTION TO CIRCUIT HOMERUN. LOCAL SWITCHING SHALL PROVIDE NORMAL ON/OFF CONTROL. UPON LOSS OF CIRCUIT POWER, EMERGENCY BATTERY PACKS SHALL PROVIDE IMMEDIATE ILLUMINATION ON BATTERY POWER, REGARDLESS OF LOCAL SWITCHING. REFER TO "TYPICAL EMERGENCY BATTERY PACK DETAIL" ON THIS SHEET.

D. ALL EXIT SIGNS AND STANDALONE EMERGENCY LIGHTING FIXTURES SHALL BE CONNECTED TO CONTINUOUSLY HOT UNSWITCHED CIRCUIT CONDUCTOR OF CIRCUIT INDICATED.

E. ALL NIGHT LIGHT FIXTURES SHALL BE FED FROM CIRCUIT A-2.

F. COORDINATE EXACT LOCATION OF ALL LIGHTING FIXTURES WITH ARCHITECTURAL REFLECTED CEILING PLAN.

G. REFER TO LIGHT FIXTURE MOUNTING DETAILS "6, 7, 8, AND 9" ON SHEET E3.2.

PLAN NOTES

1. INTERLOCK EXHAUST FANS WITH LIGHTING CIRCUIT. PROVIDE OCCUPANCY SENSOR EQUAL TO SENSOR SWITCH "CM-9-R/MP-20" TO CONTROL LIGHTS AND FAN. FAN SHALL BE CONTROLLED VIA 120V CONTACT AND LIGHTS SHALL BE CONTROLLED VIA RELAY. PROVIDE 120V CIRCUIT FOR FANS (B-33).

2. NOTE NOT USED.

3. COORDINATE HEIGHT OF BUILDING MOUNTED LIGHTING FIXTURES WITH ARCHITECT AND G.C.

4. COORDINATE EXACT LOCATION OF ALL LIGHTING FIXTURES WITH ARCHITECTURAL REFLECTED CEILING PLAN.

5. NOTE NOT USED.

6. PROVIDE RELAYS AS REQUIRED TO OPERATE LIGHTING VIA OCCUPANCY SENSOR.

7. CIRCUIT EMERGENCY BALLAST/BATTERY BACKUP TO UNSWITCHED CONTINUOUSLY HOT CONDUCTOR OF CIRCUIT INDICATED.

8. MOUNT AT 12" BELOW CEILING.

9. OCCUPANCY SENSOR EQUAL TO SENSOR SWITCH "CM-9-R/MP-20" SENSOR TO CONTROL LIGHTS.

10. TSC CONTRACTOR SHALL COORDINATE EXACT MOUNTING HEIGHT AND LOCATIONS OF GOOSENECK FIXTURES WITH ARCHITECT.

11. CONNECT BOTH EMERGENCY AND NORMAL OPERATION BALLASTS OF NIGHT LIGHTING FIXTURE TO UNSWITCHED CONTINUOUSLY HOT CIRCUIT CONDUCTOR OF CIRCUIT INDICATED.(A-2)

12. CIRCUIT EMERGENCY BALLAST/BATTERY BACKUP TO UNSWITCHED CONTINUOUSLY HOT CONDUCTOR OF CIRCUIT INDICATED. WIRE FIXTURE FOR SWITCHED OPERATION.

MOUNT ALL CONDUIT AND LIGHTING FIXTURES AS TIGHT TO DECK AS POSSIBLE IN STOCK ROOM. NOT TO BOTTOM OF JOISTS. MAINTAIN 1-1/2" SEPARATION FROM THE LOWEST SURFACE OF THE ROOF DECKING TO THE TOP OF THE FIXTURE, RACEWAY, BOX, ETC. IN ACCORDANCE WITH NEC 300.4(E).

COORDINATE MOUNTING HEIGHTS OF ALL LIGHTING FIXTURES WITH ARCHITECTURAL REFLECTED CEILING PLAN – SHEET A3.0.

ROUTE CONDUITS FOR POWER FROM BUILDING TO BOTTOM OF LIVE GOODS CENTER ROOF STRUCTURE W/LIQUID-TIGHT NON-METALLIC CONDUIT, LESS THAN 6' LENGTH. TRANSITION TO HARD CONDUIT AT STRUCTURE.

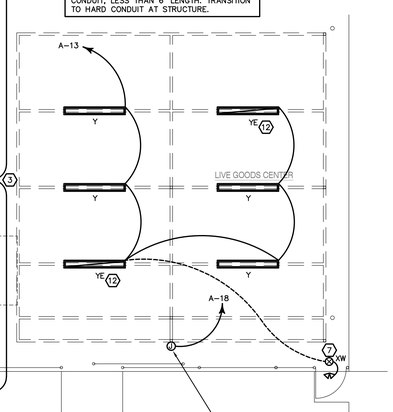

LIGHTING FIXTURE SCHEDULE

LIGHTING FIXTURE SCHEDULE – ELECTRICAL CONTRACTOR SHALL PURCHASE LIGHTING FIXTURES THROUGH TRACTOR SUPPLY COMPANY'S NATIONAL AGREEMENT WITH VILLA LIGHTING SUPPLY, INC. CONTACT ANNE VOELKER (tractorsupply@villalighting.com) AT 314-633-0554 FOR PRICING.

TYPE	MANUFACTURER	CATALOG NUMBER	VOLT	LAMPS QTY	LAMPS TYPE	WATTAGE	MOUNTING	REMARKS
A	LITHONIA LIGHTING	CLX-L96-10000LM-SEF-FDL-MVOLT-GZ10-40K-80CRI-PLR2ANG-WH	277		10000 LUMEN LED 4000K	70.8 WATTS	SURFACE MOUNTED	8' LED STRIP
AE	LITHONIA LIGHTING	CLX-L96-10000LM-SEF-FDL-MVOLT-GZ10-40K-80CRI-PS1050-SPD-PLR2BELBNG-WH	277		10000 LUMEN LED 4000K	70.8 WATTS	SURFACE MOUNTED	SAME AS 'A' BUT WITH INTEGRAL EMERGENCY BATTERY
A1	LITHONIA LIGHTING	CLX-L48-5000LM-SEF-FDL-MVOLT-GZ10-40K-80CRI-PLR2ANG-WH	277		5000 LUMEN LED 4000K	35.4 WATTS	SURFACE MOUNTED	4' LED STRIP
A1E	LITHONIA LIGHTING	CLX-L48-5000LM-SEF-FDL-MVOLT-GZ10-40K-80CRI-PS1050-SPD-PLR2BELBNG-WH	277		5000 LUMEN LED 4000K	35.4 WATTS	SURFACE MOUNTED	SAME AS 'A1' BUT WITH INTEGRAL EMERGENCY BATTERY
B	LITHONIA LIGHTING	CLX-L96-10000LM-SEF-FDL-MVOLT-GZ10-40K-80CRI-PLR2ANG-WH	277		10000 LUMEN LED 4000K	70.8 WATTS	SUSPENDED MOUNTED	8' LED STRIP
BE	LITHONIA LIGHTING	CLX-L96-10000LM-SEF-FDL-MVOLT-GZ10-40K-80CRI-PS1050-SPD-PLR2BELBNG-WH	277		10000 LUMEN LED 4000K	70.8 WATTS	SUSPENDED MOUNTED	SAME AS 'B' BUT WITH INTEGRAL EMERGENCY BATTERY
B1	LITHONIA LIGHTING	CLX-L48-5000LM-SEF-FDL-MVOLT-GZ10-40K-80CRI-PLR2ANG-WH	277		5000 LUMEN LED 4000K	35.4 WATTS	SUSPENDED MOUNTED	4' STRIP
B1E	LITHONIA LIGHTING	CLX-L48-5000LM-SEF-FDL-MVOLT-GZ10-40K-80CRI-PS1050-SPD-PLR2BELBNG-WH	277		5000 LUMEN LED 4000K	35.4 WATTS	SUSPENDED MOUNTED	SAME AS 'B1' BUT WITH INTEGRAL EMERGENCY BATTERY
G	MAXLITE	HLRS-45-U-L-P	UNV	1	5,760 LUMEN LED 5000K	45.0 WATTS	PENDANT	EXTERIOR HAZARDOUS AREA LED PENDANT LIGHT
K	LITHONIA LIGHTING	DSXW1-LED-10C-1000-50K-T3M-MVOLT-DDBXD	UNV	1	3,970 LUMEN LED 5000K	39.0 WATTS	SURFACE	EXTERIOR LED WALL LIGHT
K1	HI-LITE	H-15118-97/HL-AHD-27"-97/21/LED2/40/D/BCM-M	277	1	18W LED 4000K	18.0 WATTS	WALL MOUNT	EXTERIOR GOOSENECK WALL LIGHT
L	INDY LIGHTING	L6-45-35-U-G3-L600HW-C-L-WH	UNV	1	4500 LUMEN LED 3500K	42.3 WATTS	RECESSED	DOWNLIGHT, DAMP LOCATION RATED
P	LITHONIA LIGHTING	RSX1-LED-P3-50K-R3-MVOLT-SPA	UNV	1	14,000 LUMEN LED 5000K	109 WATTS	POLE MOUNTED ON 22' BRONZE POLE	PARKING LOT LIGHTS
R	LITHONIA LIGHTING	RSX1-LED-P3-50K-R3-MVOLT-SPA	UNV	2	14,000 LUMEN LED 5000K	218 WATTS	TWO HEADS AT 180 DEGREES POLE MOUNTED ON 22' BRONZE POLE	PARKING LOT LIGHTS
R9	LITHONIA LIGHTING	RSX1-LED-P3-50K-R3-MVOLT-SPA	UNV	2	14,000 LUMEN LED 5000K	218 WATTS	TWO HEADS AT 180 DEGREES WITH ROTATED OPTICS, POLE MOUNTED ON 22' BRONZE POLE	PARKING LOT LIGHTS
S	LITHONIA LIGHTING	RSX1-LED-P3-50K-R3-MVOLT-SPA	UNV	3	14,000 LUMEN LED 5000K	327 WATTS	THREE HEADS AT 90 DEGREES POLE MOUNTED ON 22' BRONZE POLE	PARKING LOT LIGHTS
X	EXITRONIX LIGHTING	VEX-U-BP-WB-WH-R6	UNV	–	INCL.	0.8 WATTS	SURFACE	LED EXIT SIGN
XR	EXITRONIX LIGHTING	VEX-U-BP-WB-WH-R6 / MLED2-G-WP	UNV	–	INCL.	3.8 WATTS	SURFACE	LED EXIT SIGN WITH EXTERIOR REMOTE HEADS
XW	EXITRONIX LIGHTING	VEX-WPC-1-R-W-IH-R-2RL1-WP	UNV	–	INCL.	3.6 WATTS	SURFACE	WET LOCATION RATED LED COMBINATION EXIT/EMERGENCY LIGHT WITH INTEGRAL BATTERY AND TWO REMOTE HEADS
Y	METALUX	8VT2-LD5-9-DR-UNV-L850-CD1-WL-U	UNV		9000 LUMEN LED 5000K	66.0 WATTS	SUSPENDED MOUNTED	8' LED STRIP W/ LENS AND GASKET
YE	METALUX	8VT2-LD5-9-DR-UNV-EL10W-L850-CD1-WL-U	UNV		9000 LUMEN LED 5000K	66.0 WATTS	SUSPENDED MOUNTED	SAME AS 'Y' BUT WITH INTEGRAL EMERGENCY BATTERY.

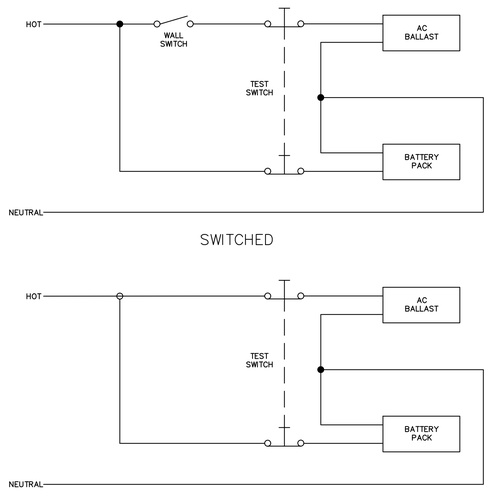

2 E1.0 **TYPICAL BATTERY PACK WIRING DIAGRAM**
NO SCALE

PRELIMINARY
NOT FOR CONSTRUCTION

OXFORD ARCHITECTURE
2934 Sidco Drive
Suite 120
Nashville, TN 37204
Architecture
Planning
Interior Architecture

PARSONS ENGINEERING, INC.
NASHVILLE, TENNESSEE
PARSONSENGINEERING.COM

TRACTOR SUPPLY COMPANY
BOUTTE
LOUISIANA

This drawing and the design shown is the property of the architect. The reproduction, copying or use of this drawing without their written consent is prohibited and any infringement will be subject to legal action

Job Number: 2428
Date: 07.23.2024
Revisions:
Revisions:
Revisions:

GENERAL LIGHTING PLAN

Sheet Number: E1.0

Project: 24159 Drawing: 24159-E1.0.dwg

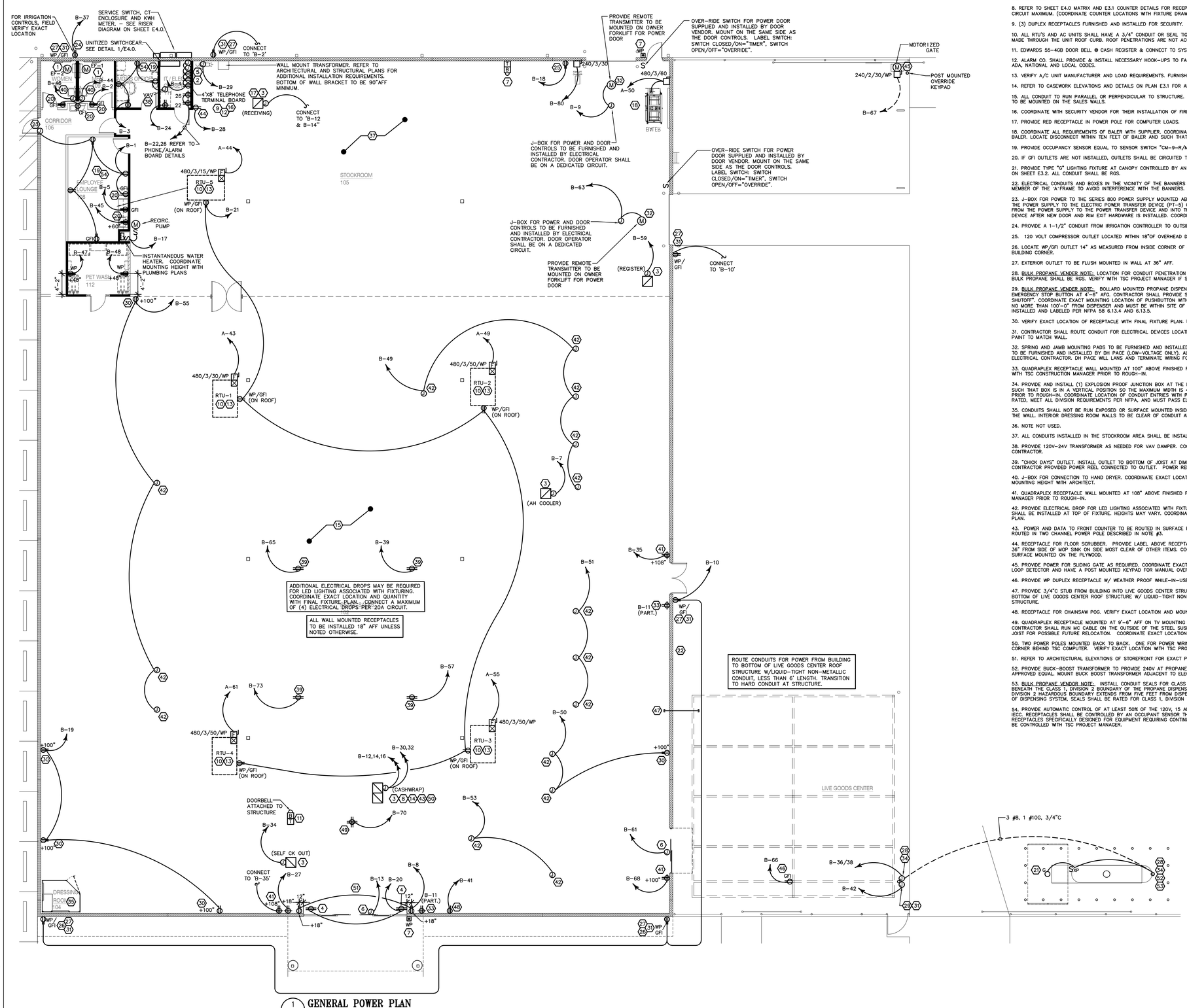

1 E2.0 **GENERAL POWER PLAN**
SCALE: 1/8" = 1'-0"

PLAN NOTES:

1. INTERLOCK EXHAUST FANS WITH LIGHTING CIRCUIT. PROVIDE OCCUPANCY SENSOR EQUAL TO SENSOR SWITCH "CM-9-R/MP-20" TO CONTROL LIGHTS AND FAN. FAN SHALL BE CONTROLLED VIA 120V CONTACT AND LIGHTS SHALL BE CONTROLLED VIA RELAY. PROVIDE 120V CIRCUIT FOR FANS (B-33).

2. COORDINATE CONDUIT ROUGH-IN FOR TAMPER AND FLOW CONNECTIONS AS WELL AS ALL OTHER FIRE ALARM DEVICES WITH FIRE ALARM CONTRACTOR.

3. FURNISH AND INSTALL POWER POLES FROM SALES COUNTERTOPS TO CEILING STRUCTURE. SPECIFY RELOC #PP2-L186-HW-B-BLACK OR EQUIVALENT. REFER TO OFFICIAL TSC FIXTURE PLAN LAYOUT SENT FROM TSC TO GC FOR EXACT LOCATIONS. ATTACH POWER POLE TOP TO UNI-STRUT AT BAR JOIST WITH A "U" CLAMP TO THE TOP OF THE POWER POLE AT THE BAR JOIST. LOOSEN THE "U" BOLT USED TO TIGHTEN THE CONNECTION TO THE POWER POLE SO THAT THE POWER POLE IS ABLE TO REMAIN IN POSITION AND THE ROOF CAN FLEX DURING EXPANSION AND CONTRACTION WITHOUT DAMAGING THE POWER POLE. REFER TO DETAILS ON SHEET E3.1.

4. RECEPTACLE FOR "STORE OPEN" AND "CUB CADET" SIGN MOUNTED IN CEILING AS SHOWN ON PLANS. INSTALL WITHIN 6" OF VERTICAL STOREFRONT. IN STORES WITH NO VESTIBULES, RECEPTACLE SHALL BE MOUNTED IN WALL ABOVE STOREFRONT GLASS.

5. JUNCTION BOX FURNISHED AND INSTALLED FOR THE FIRE PROTECTION SYSTEM ELECTRIC GONG. ELECTRICAL CONTRACTOR TO INSTALL AND WIRE FIRE GONG, COORDINATE WITH FIRE SUPPRESSION CONTRACTOR FOR VOLTAGE. PROVIDE LOW VOLTAGE TRANSFORMER AS REQUIRED.

6. JUNCTION BOX FURNISHED AND INSTALLED BY ELECTRICAL CONTRACTOR FOR POWER DOORS.

7. ELECTRICAL CONTRACTOR SHALL PROVIDE AND INSTALL AN EDWARDS 55-4G5 DOOR BELL AND AN EDWARDS 592 TRANSFORMER AT TWO LOCATIONS SHOWN. ELECTRICAL CONTRACTOR SHALL PROVIDE AND INSTALL AN EDWARDS 250 PUSHBUTTON TO CONTROL BOTH DOOR BELLS. PUSHBUTTON SHALL BE INSTALLED IN A WEATHERPROOF ENCLOSURE. TEST TO ASSURE WORKING SYSTEM. MOUNT TRANSFORMER & BELL AT 14'-0" AFF.

8. REFER TO SHEET E4.0 MATRIX AND E3.1 COUNTER DETAILS FOR RECEPTACLE AND DATA OUTLET LOCATIONS AT REGISTER COUNTERS (2) RED RECEPTACLES PER CIRCUIT MAXIMUM. (COORDINATE COUNTER LOCATIONS WITH FIXTURE DRAWINGS AND G.C.) THE RECEPTACLE BOXES WILL BE PRE-INSTALLED IN CASEWORK.

9. (3) DUPLEX RECEPTACLES FURNISHED AND INSTALLED FOR SECURITY.

10. ALL RTU'S AND AC UNITS SHALL HAVE A 3/4" CONDUIT OR SEAL TIGHT INSTALLED FOR LOW VOLTAGE CABLE. ALL ROOFTOP EQUIPMENT CONNECTIONS SHALL BE MADE THROUGH THE UNIT ROOF CURB. ROOF PENETRATIONS ARE NOT ACCEPTABLE.

11. EDWARDS 55-4G8 DOOR BELL @ CASH REGISTER & CONNECT TO SYSTEM AS NECESSARY. COORDINATE WITH G.C. FOR EXACT LOCATION OF BELL.

12. ALARM CO. SHALL PROVIDE & INSTALL NECESSARY HOOK-UPS TO FACP. ALARM CO. SHALL ALSO PROVIDE COMPLETE FIRE ALARM SYSTEM AS REQUIRED BY AHJ, ADA, NATIONAL AND LOCAL CODES.

13. VERIFY A/C UNIT MANUFACTURER AND LOAD REQUIREMENTS. FURNISH AND INSTALL BRANCH CIRCUIT RATED FOR UNIT LOAD.

14. REFER TO CASEWORK ELEVATIONS AND DETAILS ON PLAN E3.1 FOR ADDITIONAL INFORMATION ON REGISTER AND DISPLAY COUNTERS.

15. ALL CONDUIT TO RUN PARALLEL OR PERPENDICULAR TO STRUCTURE. HORIZONTAL CONDUIT SHALL BE NO LOWER THAN 15'-6". NO HORIZONTAL CONDUITS ALLOWED TO BE MOUNTED ON THE SALES WALLS.

16. COORDINATE WITH SECURITY VENDOR FOR THEIR INSTALLATION OF FIRE ALARM AND SECURITY SYSTEMS PANELS. PROVIDE 120 VOLT RED DUPLEX AND PHONE JACK.

17. PROVIDE RED RECEPTACLE IN POWER POLE FOR COMPUTER LOADS.

18. COORDINATE ALL REQUIREMENTS OF BALER WITH SUPPLIER. COORDINATE EXACT LOCATION WITH TSC FINAL FIXTURE PLAN. E.C. SHALL MAKE FINAL CONNECTION TO BALER. LOCATE DISCONNECT WITHIN TEN FEET OF BALER AND SUCH THAT IT DOES NOT INTERFERE WITH THE FINAL FIXTURE PLAN.

19. PROVIDE OCCUPANCY SENSOR EQUAL TO SENSOR SWITCH "CM-9-R/MP-20" TO CONTROL LIGHTS. SENSOR SHALL BE CENTERED IN ROOM AS MUCH AS POSSIBLE.

20. IF GFI OUTLETS ARE NOT INSTALLED, OUTLETS SHALL BE CIRCUITED TO A GFI BREAKER. LABEL OUTLETS THAT ARE ON THE GFI BREAKER.

21. PROVIDE TYPE "G" LIGHTING FIXTURE AT CANOPY CONTROLLED BY AN EXPLOSION PROOF SWITCH. CONNECT LIGHT TO PROPANE DISPENSING CIRCUIT. SEE DETAIL 2 ON SHEET E3.2. ALL CONDUIT SHALL BE RGS.

22. ELECTRICAL CONDUITS AND BOXES IN THE VICINITY OF THE BANNERS ON THE OUTSIDE FACE OF THE EXTERIOR WALL SHALL BE INSTALLED ABOVE THE LOWER MEMBER OF THE 'A'FRAME TO AVOID INTERFERENCE WITH THE BANNERS. COORDINATE EXACT LOCATION WITH FINAL FIXTURE PLAN AND TSC PROJECT MANAGER.

23. J-BOX FOR POWER TO THE SERIES 800 POWER SUPPLY MOUNTED ABOVE THE CEILING IN LINE WITH THE HINGE SIDE OF THE DOOR. PROVIDE A 1/2" CONDUIT FROM THE POWER SUPPLY TO THE ELECTRIC POWER TRANSFER DEVICE (PT-5) OF THE DOOR FRAME. CONCEALED MORTISE MOUNT. PROVIDE AND PULL TWO #18 AWG WIRE FROM THE POWER SUPPLY TO THE POWER TRANSFER DEVICE AND INTO THE DOOR.CONTRACTOR TO COMPLETE WIRING AND CONNECTION OF THE DELAYED RIM EXIT DEVICE AFTER NEW DOOR AND RIM EXIT HARDWARE IS INSTALLED. COORDINATE ALL REQUIREMENTS WITH SUPPLIER/INSTALLER. SEE DETAIL 12/E3.2.

24. PROVIDE A 1-1/2" CONDUIT FROM IRRIGATION CONTROLLER TO OUTSIDE OF CURBLINE. COORDINATE EXACT LOCATION WITH GC.

25. 120 VOLT COMPRESSOR OUTLET LOCATED WITHIN 18"OF OVERHEAD DOOR.

26. LOCATE WP/GFI OUTLET 14" AS MEASURED FROM INSIDE CORNER OF WALL. EXPOSED CONDUIT FOR ELECTRICAL OUTLET SHALL BE ROUTED WITHIN 18" OF INTERIOR BUILDING CORNER.

27. EXTERIOR OUTLET TO BE FLUSH MOUNTED IN WALL AT 36" AFF.

28. BULK PROPANE VENDOR NOTE: LOCATION FOR CONDUIT PENETRATION THROUGH GRADE FROM BUILDING TO PROPANE GAS DISPENSING SYSTEM. ALL CONDUIT FOR BULK PROPANE SHALL BE RGS. VERIFY WITH TSC PROJECT MANAGER IF SOP CAN NOT BE FOLLOWED. REFERENCE DETAILS 2,3,4,5/E3.2.

29. BULK PROPANE VENDOR NOTE: BOLLARD MOUNTED PROPANE DISPENSING SYSTEM EMERGENCY STOP PUSHBUTTON IN WEATHER PROOF JUNCTION BOX. MOUNT EMERGENCY STOP BUTTON AT 4'-6" AFG. CONTRACTOR SHALL PROVIDE SIGN AT PUSHBUTTON TO IDENTIFY AS "PROPANE – CONTAINER LIQUID VALVE EMERGENCY SHUTOFF". COORDINATE EXACT MOUNTING LOCATION OF PUSHBUTTON WITH ARCHITECT. PUSHBUTTON SHALL BE INSTALLED A MINIMUM OF 25'-0" FROM DISPENSER BUT NO MORE THAN 100'-0" FROM DISPENSER AND MUST BE WITHIN SITE OF THE DISPENSER. REFERENCE DETAIL 1/E3.2 FOR CONTROL DIAGRAM. PUSHBUTTON SHALL BE INSTALLED AND LABELED PER NFPA 58 6.13.4 AND 6.13.5.

30. VERIFY EXACT LOCATION OF RECEPTACLE WITH FINAL FIXTURE PLAN. RECEPTACLES SHALL BE INSTALLED AT 100" ABOVE FINISHED FLOOR TO BOTTOM OF BOX.

31. CONTRACTOR SHALL ROUTE CONDUIT FOR ELECTRICAL DEVICES LOCATED BELOW 96" AFF RECESSED IN THE WALL. CONDUIT MAY BE ROUTED EXPOSED ABOVE 96"AFF. PAINT TO MATCH WALL.

32. SPRING AND JAMB MOUNTING PADS TO BE FURNISHED AND INSTALLED BY GENERAL CONTRACTOR. FACTORY WIRED OPERATORS AND CONTROLS FOR OVERHEAD DOOR TO BE FURNISHED AND INSTALLED BY DH PACE (LOW-VOLTAGE ONLY). ALL CONDUIT RACEWAYS, DISCONNECTS, ELECTRICAL BOXES, WIRING, AND CONNECTIONS ARE BY ELECTRICAL CONTRACTOR. DH PACE WILL LANS AND TERMINATE WIRING FOR LOW-VOLTAGE EQUIPMENT.

33. QUADRAPLEX RECEPTACLE WALL MOUNTED AT 100" ABOVE FINISHED FLOOR FOR CORDLESS PHONE REPEATER. COORDINATE EXACT MOUNTING HEIGHT AND LOCATION WITH TSC CONSTRUCTION MANAGER PRIOR TO ROUGH-IN.

34. PROVIDE AND INSTALL (1) EXPLOSION PROOF JUNCTION BOX AT THE DISPENSING UNIT. JUNCTION BOX TO BE. COOPER CROUSE HINDS MODEL # GUAW26. INSTALL SUCH THAT BOX IS IN A VERTICAL POSITION SO THE MAXIMUM WIDTH IS 4-1/4". COORDINATE EXACT LOCATIONS AND REQUIREMENTS WITH PROPANE DISPENSING VENDOR PRIOR TO ROUGH-IN. COORDINATE LOCATION OF CONDUIT ENTRIES WITH PROPANE DISPENSING VENDOR PRIOR TO ORDERING. JUNCTION BOX MUST BE CLASS 1, DIVISION 1 RATED, MEET ALL DIVISION REQUIREMENTS PER NFPA, AND MUST PASS ELECTRICAL INSPECTION.

35. CONDUITS SHALL NOT BE RUN EXPOSED OR SURFACE MOUNTED INSIDE THE DRESSING ROOM. ANY CONDUIT FOR EXTERIOR DEVICES SHALL BE RUN CONCEALED IN THE WALL. INTERIOR DRESSING ROOM WALLS TO BE CLEAR OF CONDUIT AND JUNCTION BOXES BELOW 96" ABOVE FINISHED FLOOR.

36. NOTE NOT USED.

37. ALL CONDUITS INSTALLED IN THE STOCKROOM AREA SHALL BE INSTALLED AS TIGHT TO ROOF DECK AS ALLOWED BY CODE.

38. PROVIDE 120V-24V TRANSFORMER AS NEEDED FOR VAV DAMPER. COORDINATE EXACT REQUIREMENTS FOR VAV DAMPER WITH MECHANICAL PLANS/MECHANICAL CONTRACTOR.

39. "CHICK DAYS" OUTLET. INSTALL OUTLET TO BOTTOM OF JOIST AT DIMENSIONED LOCATION. VERIFY EXACT LOCATION WITH TSC FINAL FIXTURE PLAN. INSTALL CONTRACTOR PROVIDED POWER REEL CONNECTED TO OUTLET. POWER REEL SHALL BE HUBBELL #HBLC40123TT.

40. J-BOX FOR CONNECTION TO HAND DRYER. COORDINATE EXACT LOCATION AND MOUNTING HEIGHT WITH ARCHITECT.

41. QUADRAPLEX RECEPTACLE WALL MOUNTED AT 108" ABOVE FINISHED FLOOR FOR EAS. COORDINATE EXACT MOUNTING HEIGHT AND LOCATION WITH TSC CONSTRUCTION MANAGER PRIOR TO ROUGH-IN.

42. PROVIDE ELECTRICAL DROP FOR LED LIGHTING ASSOCIATED WITH FIXTURING. PROVIDE DUPLEX RECEPTACLE INSTALLED ON END OF CONDUIT DROP. RECEPTACLE SHALL BE INSTALLED AT TOP OF FIXTURE. HEIGHTS MAY VARY. COORDINATE EXACT LOCATION AND REQUIREMENTS WITH TSC PROJECT MANAGER AND FINAL FIXTURE PLAN.

43. POWER AND DATA TO FRONT COUNTER TO BE ROUTED IN SURFACE RACEWAY FROM REAR COUNTER. ALL POWER AND DATA TO SERVICE COUNTER AREA TO BE ROUTED IN TWO CHANNEL POWER POLE DESCRIBED IN NOTE #3.

44. RECEPTACLE FOR FLOOR SCRUBBER. PROVIDE LABEL ABOVE RECEPTACLE STATING "OUTLET FOR FLOOR SCRUBBER ONLY". IN RETROFIT STORES LOCATE 18"AFF AND 36" FROM SIDE OF MOP SINK ON SIDE MOST CLEAR OF OTHER ITEMS. COORDINATE LOCATION WITH FINAL FIXTURE PLAN PRIOR TO ROUGH-IN. RECEPTACLE TO BE SURFACE MOUNTED ON THE PLYWOOD.

45. PROVIDE POWER FOR SLIDING GATE AS REQUIRED. COORDINATE EXACT REQUIREMENTS WITH GATE VENDOR. THE REAR GATE IS TO BE CONTROLLED BY AN INDUCTIVE LOOP DETECTOR AND HAVE A POST MOUNTED KEYPAD FOR MANUAL OVERRIDE. PROVIDE CONTROL WIRING AS REQUIRED PER VENDOR RECOMMENDATIONS.

46. PROVIDE WP DUPLEX RECEPTACLE W/ WEATHER PROOF WHILE-IN-USE COVER IN CAST BOX MOUNTED TO SHADE STRUCTURE POST FOR MOBILE POS SYSTEM.

47. PROVIDE 3/4"C STUB FROM BUILDING INTO LIVE GOODS CENTER STRUCTURE BELOW EAVE FOR LOW VOLTAGE/SECURITY WIRING. ROUT CONDUITS OVERHEAD TO BOTTOM OF LIVE GOODS CENTER ROOF STRUCTURE W/ LIQUID-TIGHT NON-METALLIC CONDUIT, LESS THAN 6' LENGTH, TERMINATE W/ CLAMP AT UNDERSIDE OF STRUCTURE.

48. RECEPTACLE FOR CHAINSAW POG. VERIFY EXACT LOCATION AND MOUNTING HEIGHT WITH TSC CONSTRUCTION MANAGER AND FINAL FIXTURE PLAN.

49. QUADRAPLEX RECEPTACLE MOUNTED AT 9'-6" AFF ON TV MOUNTING BRACKET. RECEPTACLE TO BE INSTALLED ON THE INSIDE OF ONE OF THE STEEL BRACKETS, CONTRACTOR SHALL RUN MC CABLE ON THE OUTSIDE OF THE STEEL SUSPENSION POLE AND SECURE TO THE POLE. LEAVE 16" OF SLACK MC CABLE COILED AT THE BAR JOIST FOR POSSIBLE FUTURE RELOCATION. COORDINATE EXACT LOCATION WITH FINAL FIXTURE PLAN AND TSC CONSTRUCTION MANAGER.

50. TWO POWER POLES MOUNTED BACK TO BACK. ONE FOR POWER WIRING AND ONE FOR LOW VOLTAGE WIRING. SECURE POWER POLES TO TOP OF COUNTER ON RIGHT CORNER BEHIND TSC COMPUTER. VERIFY EXACT LOCATION WITH TSC PROJECT MANAGER AND FINAL FIXTURE PLAN.

51. REFER TO ARCHITECTURAL ELEVATIONS OF STOREFRONT FOR EXACT PLACEMENT OF DEVICES ON FRONT WALL.

52. PROVIDE BUCK-BOOST TRANSFORMER TO PROVIDE 240V AT PROPANE DISPENSER. BUCK-BOOST TRANSFORMER SHALL BE FEDERAL PACIFIC #K1XGF12-0.5 OR APPROVED EQUAL. MOUNT BUCK BOOST TRANSFORMER ADJACENT TO ELECTRICAL PANEL. 240V MUST BE PROVIDED AT THE PROPANE DISPENSER.

53. BULK PROPANE VENDOR NOTE: INSTALL CONDUIT SEALS FOR CLASS 1, DIVISION 2 HAZARDOUS ENVIRONMENT ON BOTH ENDS OF ANY CONDUIT THAT ROUTES BENEATH THE CLASS 1, DIVISION 2 BOUNDARY OF THE PROPANE DISPENSING SYSTEM WITHIN TEN FEET OF EMERGENCE OF CONDUIT FROM BELOW GRADE. CLASS 1, DIVISION 2 HAZARDOUS BOUNDARY EXTENDS FROM FIVE FEET FROM DISPENSING SYSTEM TO 20 FEET OF DISPENSING SYSTEM. FOR CONDUITS ROUTING WITHIN FIVE FEET OF DISPENSING SYSTEM, SEALS SHALL BE RATED FOR CLASS 1, DIVISION 1 HAZARDOUS ENVIRONMENT.

54. PROVIDE AUTOMATIC CONTROL OF AT LEAST 50% OF THE 120V, 15 AND 20A RECEPTACLES LOCATED IN THE MANGER'S OFFICE AND BREAK ROOM PER THE 2021 IECC. RECEPTACLES SHALL BE CONTROLLED BY AN OCCUPANT SENSOR THAT SHALL TURN RECEPTACLES OFF WITHIN 20 MINUTES OF ALL OCCUPANTS LEAVING SPACE. RECEPTACLES SPECIFICALLY DESIGNED FOR EQUIPMENT REQUIRING CONTINUOUS OPERATION SHALL NOT BE INCLUDED IN CONTROLS. VERIFY WHICH RECEPTACLES ARE TO BE CONTROLLED WITH TSC PROJECT MANAGER.

PRELIMINARY
NOT FOR CONSTRUCTION

OXFORD ARCHITECTURE
2934 Sidco Drive
Suite 120
Nashville, TN 37204
Architecture
Planning
Interior Architecture

PARSONS ENGINEERING, INC.
NASHVILLE, TENNESSEE
PARSONSENGINEERING.COM

TRACTOR SUPPLY COMPANY
BOUTTE
LOUISIANA

This drawing and the design shown is the property of the architect. The reproduction, copying or use of this drawing without their written consent is prohibited and any infringement will be subject to legal action

Job Number: 2428
Date: 07.23.2024
Revisions:
Revisions:
Revisions:

GENERAL POWER PLAN
Sheet Number: E2.0

Project: 24159 Drawing: 24159-E2.0.dwg

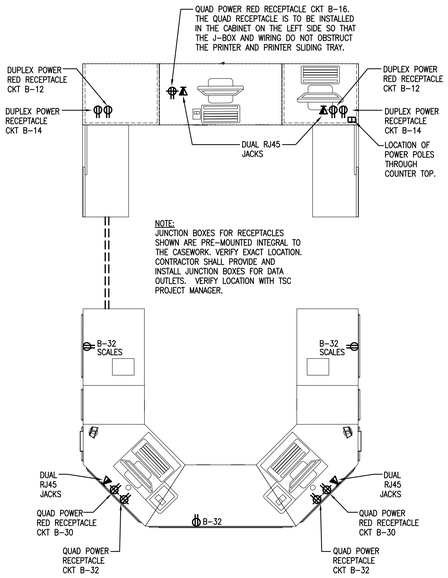

7 E3.1 **FUSION CASHWRAP DETAIL**
N.T.S.

6 E3.1 **NOT USED**
N.T.S.

8 E3.1 **NOT USED**
N.T.S.

9 E3.1 **NOT USED**
N.T.S.

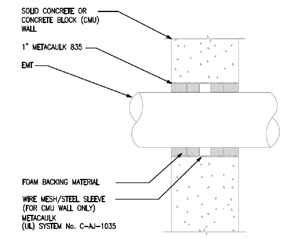

1 E3.1 **CONCRETE WALL PENETRATION (2HR.)**
N.T.S.

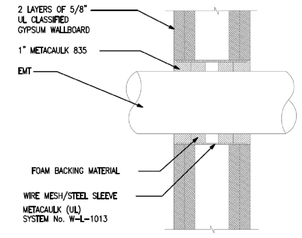

2 E3.1 **GYPSUM WALL PENETRATION (2HR.)**
N.T.S.

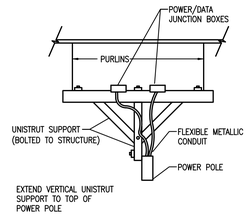

3 E3.1 **POWER POLE CONNECTION DETAIL**
N.T.S.

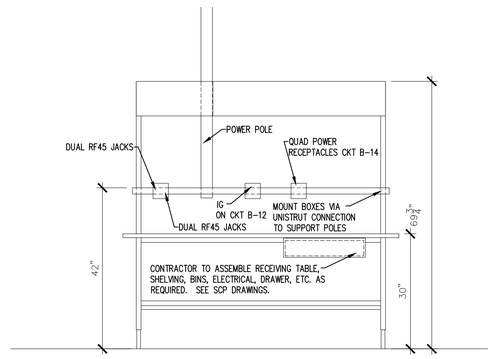

5 E3.1 **RECEIVING TABLE LAYOUT**
N.T.S.

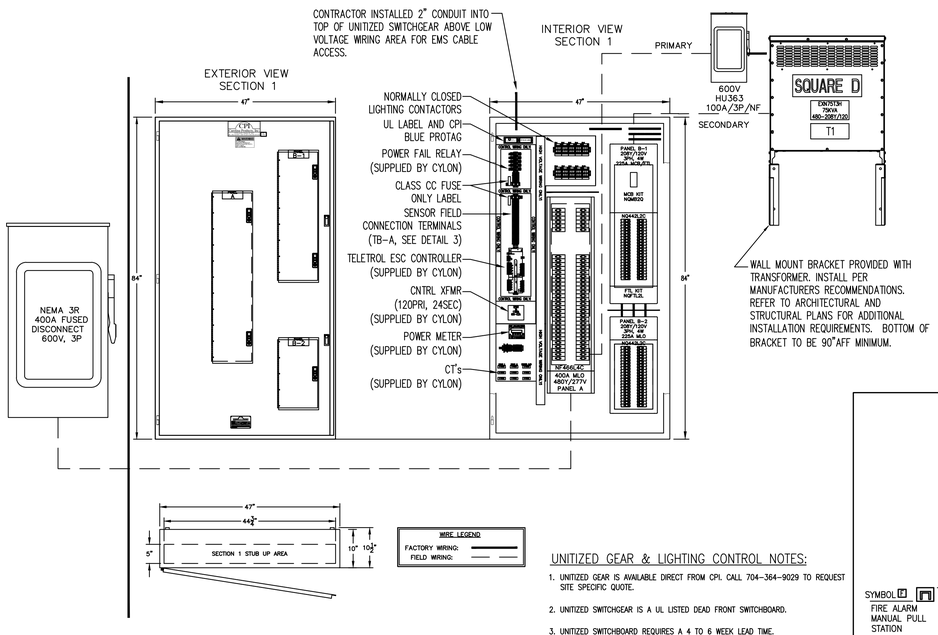

UNITIZED GEAR & LIGHTING CONTROL NOTES:

1. UNITIZED GEAR IS AVAILABLE DIRECT FROM CPI. CALL 704-364-9029 TO REQUEST SITE SPECIFIC QUOTE.
2. UNITIZED SWITCHGEAR IS A UL LISTED DEAD FRONT SWITCHBOARD.
3. UNITIZED SWITCHBOARD REQUIRES A 4 TO 6 WEEK LEAD TIME.
4. EC AND GC PLANS ARE IN THE BINDER NOTEBOOK INSIDE CPI DOOR.

4 E3.1 **UNITIZED SWITCHGEAR ELEVATION**
N.T.S.

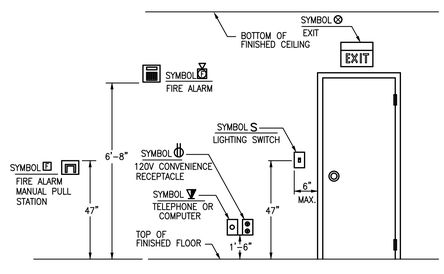

NOTE:
VERIFY HEIGHTS SHOWN COMPLY WITH LOCAL BUILDING CODE.

10 E3.1 **TYPICAL DEVICE MOUNTING HEIGHT**
N.T.S.

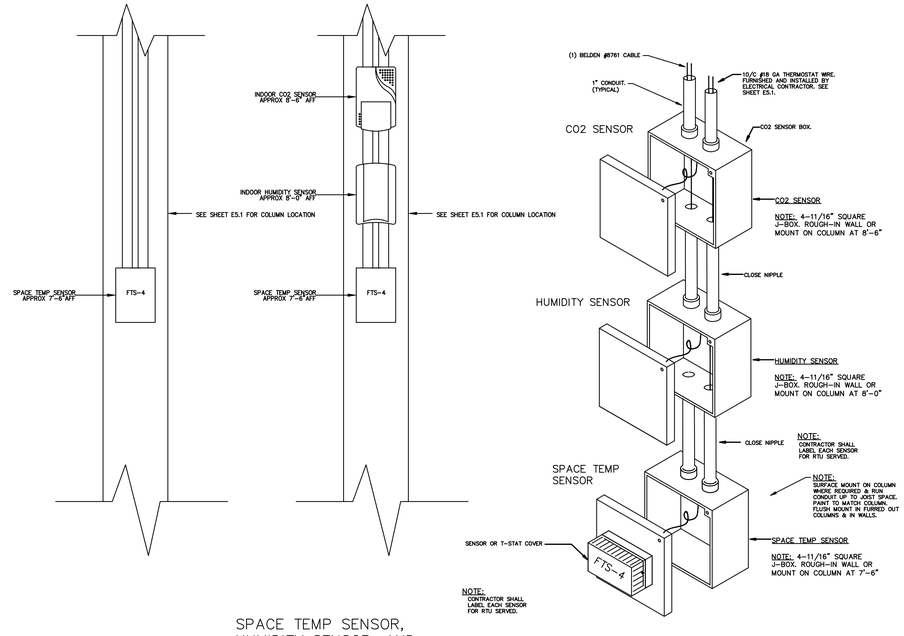

NOTE:
ALL SENSORS ARE MOUNTED TO COLUMNS ON THE SALES FLOOR AND MUST BE AFFIXED TO THE SURFACE OF THE COLUMN THAT FACES THE CENTER OF THE SALES AREA. ALL SENSORS ARE INSTALLED BY EMS VENDOR. CONTRACTOR SHALL INSTALL CONDUIT, BOXES, AND CONTROL CABLING AS SHOWN FOR FUTURE INSTALLATION OF SENSORS. MECHANICAL CONTRACTOR SHALL PROVIDE TEMPORARY T-STATS TO RUN THE UNITS PRIOR TO EMS INSTALLATION.

SPACE TEMP SENSOR, HUMIDITY SENSOR, AND CO2 SENSOR DETAIL

11 E3.1 **T-STAT MOUNTING DETAIL**
N.T.S.

PRELIMINARY
NOT FOR CONSTRUCTION

OXFORD ARCHITECTURE
2934 Sidco Drive
Suite 120
Nashville, TN 37204
Architecture
Planning
Interior Architecture

PARSONS ENGINEERING, INC.
NASHVILLE, TENNESSEE
PARSONSENGINEERING.COM

TRACTOR SUPPLY COMPANY
BOUTTE
LOUISIANA

This drawing and the design shown is the property of the architect. The reproduction, copying or use of this drawing without their written consent is prohibited and any infringement will be subject to legal action

Job Number: 2428
Date: 07.23.2024
Revisions:
Revisions:
Revisions:
ELEC SYSTEM/VENDOR DETAILS

Sheet Number: E3.1

Project: 24159 Drawing: 24159-E3.1.dwg

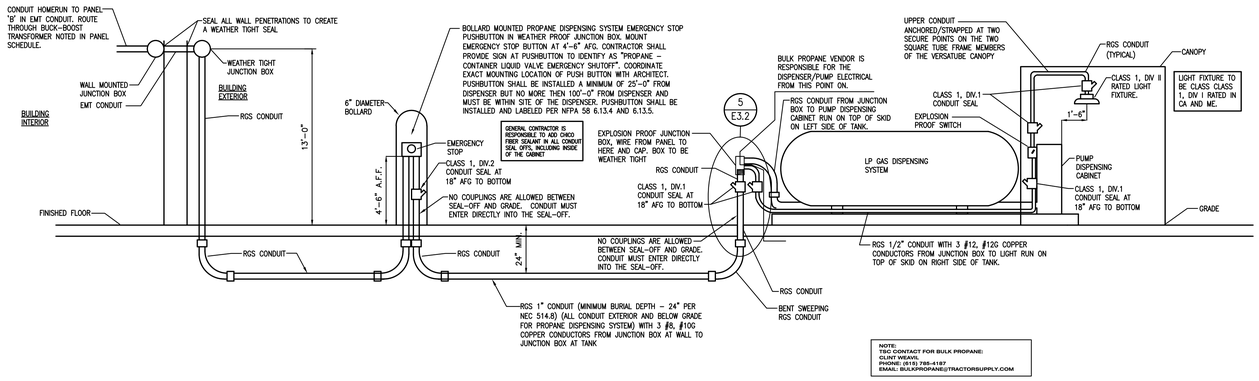

DETAIL NOTES: (11/E1.0 ONLY)

1. CONDUIT FROM BUILDING TO DISPENSING SYSTEM SHALL BE ROUTED MINIMUM 24" BELOW GRADE PER NEC ARTICLE 514.8.
2. ALL EQUIPMENT LOCATED WITHIN FIVE FEET OF TANK SHALL BE RATED FOR USE IN CLASS 1, DIVISION 1 HAZARDOUS LOCATIONS.
3. ALL EQUIPMENT LOCATED BETWEEN FIVE FEET OF TANK AND 20 FEET OF TANK SHALL BE RATED FOR USE IN CLASS 1, DIVISION 2 HAZARDOUS LOCATIONS.
4. ALL CONDUIT SHALL BE RGS. NO MC OR BLACK IRON PERMITTED. ALL FITTINGS ON RGS CONDUITS SHALL BE THREADED.
5. CONDUIT SEALS SHALL BE INSTALLED ON ALL CONDUITS THAT PASS INTO OR THROUGH THE CLASS 1, DIVISION 1 OR 2 HAZARDOUS BOUNDARIES WITHIN TEN FEET AFTER PENETRATION ABOVE GRADE ON EACH END OF CONDUIT PER NEC 514.9.
6. PROVIDE AND INSTALL (1) EXPLOSION PROOF JUNCTION BOX AT THE DISPENSING UNIT. JUNCTION BOX TO BE COOPER CROUSE HINDS MODEL # DUAN26. INSTALL SUCH THAT BOX IS IN A VERTICAL POSITION SO THE MAXIMUM WIDTH IS 4+1/4". COORDINATE EXACT LOCATIONS AND REQUIREMENTS WITH PROPANE DISPENSING VENDOR PRIOR TO ROUGH-IN. COORDINATE LOCATION OF CONDUIT ENTRIES WITH PROPANE DISPENSING VENDOR PRIOR TO ORDERING.
7. REFERENCE SHEET A-1 FOR EXACT LOCATION OF CONDUIT STUB-UP AT PROPANE TANK.

PROPANE RESPONSIBILITY NOTES:

IF PROPANE IS DELIVERED PRIOR TO FIXTURE DATE:

1. GC IS RESPONSIBLE FOR INFRASTRUCTURE RELATED TO PROPANE TANK INSTALLATION.
2. GC IS RESPONSIBLE FOR ELECTRICAL PERMITTING AND FINAL CONNECTION TO PUMP DISPENSING CABINET.
3. BULK PROPANE VENDOR IS RESPONSIBLE FOR GAS PERMITTING OF THE TANK.
4. BULK PROPANE VENDOR IS RESPONSIBLE FOR INSTALLATION AND FINAL GAS CONNECTION AND INSPECTION OF THE TANK.

IF PROPANE TANK IS DELIVERED AFTER FIXTURE DATE:

1. GC IS RESPONSIBLE FOR INFRASTRUCTURE RELATED TO PROPANE TANK INSTALLATION.
2. BULK PROPANE VENDOR IS RESPONSIBLE FOR ELECTRICAL PERMITTING AND FINAL CONNECTION TO PUMP DISPENSING CONTROL PANEL.
3. BULK PROPANE VENDOR IS RESPONSIBLE FOR GAS PERMITTING OF THE TANK.
4. BULK PROPANE VENDOR IS RESPONSIBLE FOR INSTALLATION AND FINAL GAS CONNECTION AND INSPECTION OF THE TANK.

2 E3.2 **PROPANE DISPENSING SYSTEM DETAIL**
N.T.S.

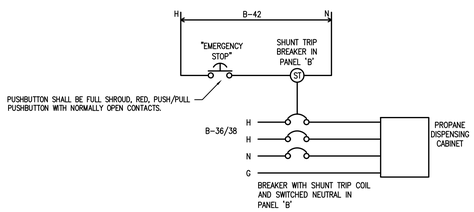

1 E3.2 **PROPANE DISPENSING SYSTEM CONTROL DIAGRAM**
N.T.S.

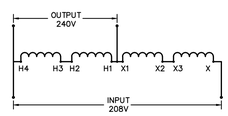

FEDERAL PACIFIC DIAGRAM D1

3 E3.2 **PROPANE DISPENSING SYSTEM BUCK-BOOST TRANSFORMER WIRING DIAGRAM**
N.T.S.

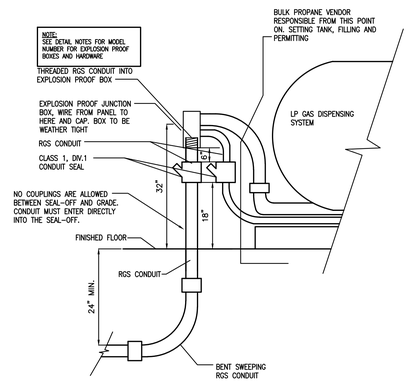

5 E3.2 **ENLARGED DETAIL**
N.T.S.

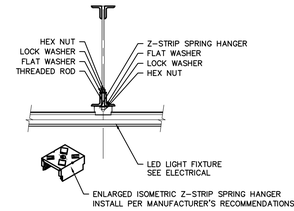

6 E3.2 **Z-STRIP SPRING HANGER**
N.T.S.

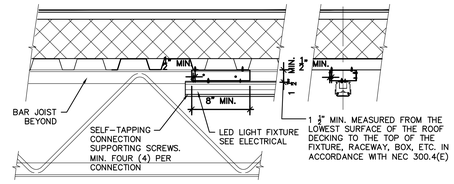

NOTE: SECURE PER LIGHT MANUFACTURER'S INSTALLATION GUIDELINES.

7 E3.2 **DECK ATTACHMENT DETAIL**
N.T.S.

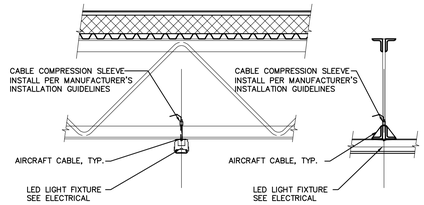

NOTE: SECURE PER LIGHT MANUFACTURER'S INSTALLATION GUIDELINES. FOR CONTINUOUS ROW MOUNTING, UTILIZE END PLATE COUPLER PER LIGHT MANUFACTURER'S INSTALLATION GUIDELINES.

8 E3.2 **ALTERNATE ATTACHMENT DTL**
N.T.S.

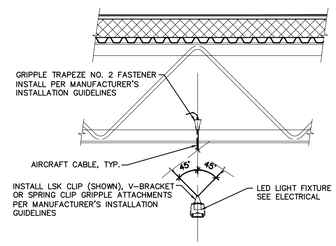

NOTE: EACH CONTINUOUS ROW OF LIGHT FIXTURES SHALL HAVE ONE VERTICAL SUPPORT AND ONE SET OF DIAGONAL SUPPORTS LOCATED 6" – 12" FROM EACH END OF THE ROW. EACH LIGHT FIXTURE IN A CONTINUOUS ROW SHALL HAVE A MINIMUM OF (1) ONE SUPPORT. WHERE APPLICABLE DIAGONAL SUPPORTS SHALL BE LOCATED AT NO GREATER THAN 12'-0" APART. ANY LIGHT FIXTURE WHICH IS INDEPENDENTLY SUPPORTED SHALL HAVE A MINIMUM OF (2) SUPPORTS WITH EACH SUPPORT LOCATED 6" FROM THE END OF THE FIXTURE. NON-CABLE OR FIXTURES MOUNTED DIRECTLY TO THE BOTTOM OF THE SUPPORTING STRUCTURE DO NOT REQUIRE DIAGONAL SUPPORT. AIRCRAFT CABLE IS ALLOWED; NO CHAIN.

9 E3.2 **ALTERNATE ATTACHMENT DTL**
N.T.S.

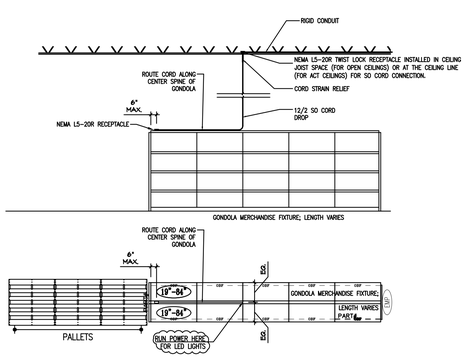

10 E3.2 **ELECTRICAL DROP DETAIL**
NO SCALE

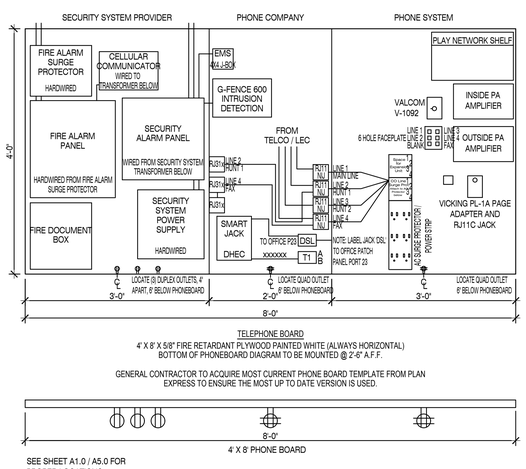

11 E3.2 **TELEPHONE BOARD DETAIL**
NO SCALE

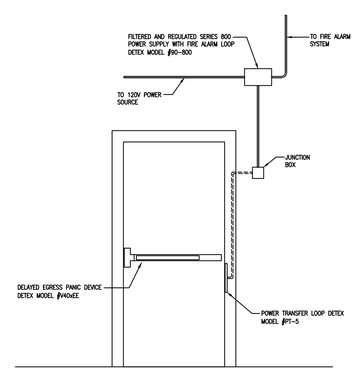

DETAIL NOTES: (7/E1.0 ONLY)

1. CONTRACTOR IS RESPONSIBLE FOR FURNISHING AND INSTALLING THE DETEX HARDWARE MATERIALS TO BE ORDERED FROM DH PACE.
2. CONTRACTOR IS RESPONSIBLE FOR INSTALLING THE V40xEE DELAYED EGRESS PANIC DEVICE.
3. CONTRACTOR IS RESPONSIBLE FOR INSTALLING THE 90-800 24VDC FILTERED POWER SUPPLY (24V TRANSFORMER MOUNTED ABOVE CEILING LINE).
4. CONTRACTOR WIRES THE DELAYED EGRESS PANIC DEVICE THROUGH THE PT-5 POWER TRANSFER DEVICE MOUNTED ON THE JAMB LEG OF THE DOOR AND UP TO THE POWER SUPPLY TRANSFORMER.
5. FIRE ALARM VENDOR MAKES CONNECTION FROM THE FIRE LOOP CONTACTORS ON THE 90-800 POWER SUPPLY TO THE FIRE ALARM PANEL.

12 E3.2 **DETEX EXIT DEVICE DETAIL**
NO SCALE

PRELIMINARY
NOT FOR CONSTRUCTION

OXFORD ARCHITECTURE
2934 Sidco Drive
Suite 120
Nashville, TN 37204
Architecture
Planning
Interior Architecture

PARSONS ENGINEERING, INC.
NASHVILLE, TENNESSEE
PARSONSENGINEERING.COM

TSC
TRACTOR SUPPLY COMPANY
BOUTTE
LOUISIANA

This drawing and the design shown is the property of the architect. The reproduction, copying or use of this drawing without their written consent is prohibited and any infringement will be subject to legal action

Job Number: 2428
Date: 07.23.2024
Revisions:
Revisions:
Revisions:
ELEC SYSTEM/VENDOR DETAILS

Sheet Number: E3.2

Project: 24159 Drawing: 24159-E3.2.dwg

ELECTRICAL SPECIFICATIONS

SECTION 16000 GENERAL PROVISIONS

PART 1 GENERAL

1.01 REFERENCE STANDARDS

A. NFPA 70 NATIONAL ELECTRICAL CODE

B. NFPA 101 LIFE SAFETY CODE

C. ALL OTHER APPLICABLE STATE AND LOCAL CODES.

1.02 SUBMITTALS

A. SHOP DRAWINGS:

1. SUBMIT FOR APPROVAL, PRIOR TO INSTALLATION, SIX COPIES OF COMPLETE DESCRIPTIVE DATA ON ALL EQUIPMENT AND SYSTEMS AS REQUIRED BY OTHER SECTIONS OF THIS SPECIFICATION. CLEARLY INDICATE ALL PROPOSED SUBSTITUTIONS AND DEVIATIONS FROM DRAWINGS AND SPECIFICATIONS.

2. CHECK ALL SUBMITTALS FOR CLEARANCES AND COORDINATION WITH OTHER TRADES. SUBMITTALS SHALL BE CERTIFIED, BY THE CONTRACTOR'S APPROVAL STAMP, THAT ALL CONDITIONS HAVE BEEN CHECKED AND THAT NO CONFLICTS EXIST.

B. RECORD DRAWINGS

1. SUBMIT, TO THE OWNER, RECORD DRAWINGS SHOWING FIELD CHANGES MARKED IN RED.

1.03 COORDINATION

A. UTILITY COMPANIES

1. COORDINATE WITH UTILITY COMPANIES FOR SPECIFIC REQUIREMENTS FOR ELECTRICAL POWER AND TELEPHONE SERVICE.

2. INSTALL ELECTRICAL SERVICE IN ACCORDANCE WITH CURRENT UTILITY COMPANY REQUIREMENTS.

B. OTHER TRADES

1. COORDINATE WITH MECHANICAL DRAWINGS FOR POWER AND CONTROL REQUIREMENTS FOR THE SPECIFIC EQUIPMENT TO BE INSTALLED AND FOR EQUIPMENT SUCH AS STARTERS AND DISCONNECT SWITCHES THAT MAY BE FURNISHED WITH THE EQUIPMENT.

C. OWNER FURNISHED EQUIPMENT

1. COORDINATE WITH VENDOR'S OF OWNER FURNISHED EQUIPMENT FOR POWER REQUIREMENTS PRIOR TO ROUGH-IN. COORDINATION SHALL INCLUDE BUT NOT BE LIMITED TO OVERCURRENT PROTECTION TYPE AND SIZE, WIRE SIZE, NEMA CONFIGURATION OF ASSOCIATED RECEPTACLES, ETC.

1.04 WORK INCLUDED

A. THE WORK OF THIS SECTION INCLUDES FURNISHING OF LABOR AND MATERIALS AS REQUIRED FOR INSTALLATION OF A NEW ELECTRICAL DISTRIBUTION SYSTEM INCLUDING SERVICE, FEEDERS, PANELBOARDS, BRANCH CIRCUITS, LIGHTING, AND CONNECTIONS TO ALL EQUIPMENT REQUIRING ELECTRICAL POWER.

B. INSTALLATION OF CONDUIT FOR TELEPHONE AND DATA WIRING.

C. INSTALLATION OF SEISMIC RESTRAINT SYSTEMS FOR ELECTRICAL COMPONENTS IN SEISMIC REGIONS.

1.05 DRAWINGS

A. THE DRAWINGS ARE PARTLY DIAGRAMMATIC AND DO NOT SHOW IN DETAIL ALL REQUIRED FEATURES OF THE WORK NOR CONCEALED CONDITIONS. THEY SHALL BE SUPPLEMENTED BY THE CONTRACTOR'S KNOWLEDGE AND EXPERIENCE.

PART 2 PRODUCTS

2.01 GENERAL

A. ALL ELECTRICAL EQUIPMENT INSTALLED SHALL BEAR THE UL LABEL EXCEPT WHERE UL DOES NOT LABEL SUCH EQUIPMENT.

2.02 GUARANTEE

A. FURNISH A WRITTEN GUARANTEE THAT ALL EQUIPMENT FURNISHED AND INSTALLED WILL BE FREE OF DEFECTS OF MATERIAL AND WORKMANSHIP FOR A PERIOD OF 1 YEAR FROM DATE OF ACCEPTANCE OF THE WORK BY THE OWNER. PROMPTLY REPLACE AND REPAIR ALL DEFECTIVE EQUIPMENT AND ALL OTHER EQUIPMENT DAMAGED THEREBY AT NO ADDITIONAL COST TO THE OWNER.

PART 3 EXECUTION

3.01 GENERAL

A. VISIT PROJECT SITE BEFORE SUBMISSION OF BID AND BECOME FAMILIAR WITH EXISTING CONDITIONS AND LOCATIONS OF EXISTING UTILITIES.

B. THE ENTIRE INSTALLATION SHALL BE MADE IN A NEAT MANNER BY PERSONS SKILLED IN THE ELECTRICAL TRADE AND SHALL BE IN ACCORDANCE WITH THE REFERENCE STANDARDS LISTED ABOVE.

C. MAKE POWER CONNECTIONS TO AIR CONDITIONING EQUIPMENT AND OWNER FURNISHED EQUIPMENT. FURNISH AND INSTALL ALL ASSOCIATED RECEPTACLES AND DISCONNECT SWITCHES. FUSE SIZES FOR DISCONNECT SWITCHES SHALL BE AS RECOMMENDED BY THE EQUIPMENT MANUFACTURER.

D. FURNISH AND INSTALL CONDUIT AND WIRE FOR AIR CONDITIONING CONTROL EQUIPMENT. SEE MECHANICAL DRAWINGS FOR LOCATIONS AND REQUIREMENTS.

E. PROVIDE SEISMIC RESTRAINT SYSTEMS TO MEET TOTAL DESIGN LATERAL FORCE REQUIREMENTS FOR SUPPORT AND RESTRAINT OF PIPING, CONDUIT, CABLE TRAYS, LIGHTING FIXTURES AND OTHER SIMILAR SYSTEMS AND EQUIPMENT AS REQUIRED BY THE ENFORCED EDITION OF THE INTERNATIONAL BUILDING CODE, ASCE-7, AND LOCAL AUTHORITIES. RESTRAINT SELECTION AND INSTALLATION DETAILS SHALL BE APPROVED BY A LICENSED ENGINEER EXPERIENCED IN SEISMIC RESTRAINT DESIGN.

3.02 TESTING

A. ALL SYSTEMS AND EQUIPMENT INSTALLED SHALL BE COMPLETELY TESTED AND SHALL BE LEFT IN GOOD WORKING ORDER.

SECTION 16050 BASIC ELECTRICAL MATERIALS AND METHODS

PART 1 GENERAL

NOT APPLICABLE

PART 2 PRODUCTS

2.01 RACEWAYS

A. RIGID STEEL CONDUIT

B. ELECTRICAL METALLIC TUBING

C. POLYVINYLCHLORIDE CONDUIT

2.02 WIRES AND CABLES

A. SERVICE AND FEEDERS: COPPER, 600 VOLT, TYPE THHN OR THWN INSULATION OR ALUMINUM CONDUCTOR, 600 VOLT, TYPE XHHW-2 INSULATION. SIZES INDICATED ON DRAWINGS ARE FOR COPPER. ALUMINUM CONDUCTORS SHALL BE SIZED TO HAVE AMPACITY EQUAL TO COPPER CONDUCTORS INDICATED ON DRAWINGS.

B. BRANCH CIRCUIT WIRES: COPPER CONDUCTOR, 600 VOLT, TYPE THHN OR THWN INSULATION.

C. BRANCH CIRCUIT CABLES: COPPER CONDUCTOR, 600 VOLT, TYPE MC WITH INSULATED EQUIPMENT GROUNDING CONDUCTOR.

D. CONTROL CIRCUIT CABLES: COPPER CONDUCTOR, NO.14 AWG, TYPE THHN, OR AS REQUIRED BY EQUIPMENT MANUFACTURER.

2.03 JUNCTION BOXES - PROVIDE STEEL BOXES FOR INTERIOR APPLICATIONS AND CAST TYPE BOXES FOR OUTDOOR APPLICATIONS.

2.04 WIRING DEVICES

A. WALL SWITCHES: AC GENERAL USE SNAP SWITCH WITH TOGGLE HANDLE, SPECIFICATION GRADE, 20 AMPERES, 120-277 VOLTS.

B. WALL DIMMER SWITCHES, APPROPRIATE FOR LED APPLICATIONS.

C. WALL OCCUPANCY SENSORS TO BE DUAL TECHNOLOGY (PASSIVE INFRARED AND ULTRASONIC). COMBINATION DIMMING TYPE WHERE INDICATED.

D. CEILING MOUNTED OCCUPANCY SENSORS, DUAL TECHNOLOGY (PASSIVE INFRARED AND ULTRASONIC) TYPE. CORRIDOR APPLICATION SENSORS TO BE PASSIVE INFARED TYPE. PROVIDE POWER PACKS AND/OR RELAYS AND ADDITIONAL SENSORS WHERE REQUIRED BY VENDOR.

E. RECEPTACLES: TYPE 5-15R, UNLESS INDICATED OTHERWISE, SPECIFICATION GRADE. DUPLEX RECEPTACLES ON DEDICATED CIRCUITS SHALL BE NEMA TYPE 5-20R. LISTED TAMPER RESISTANT RECEPTACLES SHALL BE PROVIDED IN THOSE AREAS DESIGNATED PER NEC 406.12. OUTDOOR RECEPTACLES SHALL BE WEATHER RESISTANT. DEVICE COLOR TO BE SELECTED BY ARCHITECT.

F. COVERPLATES

1. INDOOR: NYLON, COLOR TO BE SELECTED BY ARCHITECT.

2. OUTDOOR & INDOOR WET LOCATIONS: PAINTED, CAST ALUMINUM, EXTRA DUTY RATED, WEATHERPROOF WHILE IN USE TYPE.

2.05 IDENTIFICATION

A. PROVIDE LAMINATED PLASTIC TAGS FOR ALL PANELBOARDS AND DISCONNECT SWITCHES. TAGS SHALL COMPLETELY IDENTIFY EQUIPMENT MARKED OR CONTROLLED.

PART 3 EXECUTION

3.01 RACEWAYS

A. ALL RACEWAYS SHALL BE INSTALLED IN ACCORDANCE WITH MANUFACTURERS' INSTRUCTIONS.

B. PERMITTED USAGE:

1. ALL INTERIOR RACEWAYS SHALL BE GALVANIZED ELECTRICAL METALLIC TUBING (EMT).

2. RACEWAYS UNDERGROUND, EXPOSED TO EXTERIOR, OR CAST IN CONCRETE SHALL BE GALVANIZED RIGID STEEL CONDUIT (RGS) OR SCHEDULE 40 PVC.

C. INSTALLATION:

1. IN LONG RACEWAYS FURNISH AND INSTALL THE PROPER NUMBER AND SIZE PULL BOXES TO FACILITATE INSTALLATION OF CONDUCTORS.

2. INSTALL SEPARATE GROUNDING CONDUCTOR IN EACH RACEWAY.

3. PROVIDE RIGID GALVANIZED STEEL ELBOWS AND VERTICAL SECTIONS FOR RUNS OF PVC CONDUIT ENTERING GROUND OR FLOOR IN UNPROTECTED LOCATIONS.

3.02 WIRES AND CABLES

A. CONDUCTORS SHOWN ON DRAWINGS AS SIZED FOR COPPER UNLESS NOTED OTHERWISE. WHEN USING ALUMINUM, SIZE FOR EQUAL OR GREATER AMPACITY, AND RESIZE CONDUIT AS REQUIRED.

B. ALL POWER WIRING SHALL BE INSTALLED IN CONDUIT EXCEPT AS PERMITTED BELOW.

C. BRANCH CIRCUITS RUN CONCEALED IN WALLS OR CEILINGS AND RATED AT 20 AMPS MAY BE TYPE MC CABLE.

D. LOW VOLTAGE CONTROL AND SIGNAL CABLE MAY BE RUN OPEN WHEN CONCEALED ABOVE ACCESSIBLE CEILINGS. CABLES AND CABLE SUPPORTS INSTALLED IN AIR PLENUMS MUST BE PLENUM RATED. OPEN WIRING SHALL BE SUPPORTED FROM STRUCTURE.

SECTION 16400 SERVICE AND DISTRIBUTION

PART 1 GENERAL

1.01 SUBMITTALS

A. UNITIZED SWITCHGEAR

B. DISCONNECT SWITCHES

C. TRANSFORMERS

D. FUSES

PART 2 PRODUCTS

2.01 UNITIZED SWITCHGEAR

A. UNITIZED SWITCHGEAR SHALL CONTAIN BREAKERS AS DESCRIBED ON THE PANEL SCHEDULES. UNITIZED SWITCHGEAR SHALL BE RATED FOR THE SHORT CIRCUIT INTERRUPTING CAPACITY INDICATED AND SERIES COMBINATION RATINGS MUST BE UL RECOGNIZED. UNITIZED SWITCHGEAR SHALL BE PURCHASED FROM NATIONAL ACCOUNT VENDOR LISTED ON THE PLANS.

2.02 DISCONNECT SWITCHES

A. FUSIBLE OR NONFUSIBLE QUICK-MAKE, QUICK-BREAK, LOAD INTERRUPTER ENCLOSED KNIFE SWITCH WITH EXTERNALLY OPERABLE HANDLE INTERLOCKED TO PREVENT OPENING FRONT COVER WITH SWITCH IN "ON" POSITION. APPROVED MANUFACTURERS ARE CUTLER-HAMMER, GENERAL ELECTRIC, SIEMENS, AND SQUARE D.

2.03 TRANSFORMERS(DOE EFFICIENT DRY-TYPE)

A. AIR COOLED, 480 VOLT DELTA PRIMARY, 208/120 VOLT WYE SECONDARY, KVA SIZE AS INDICATED, 150 DEGREES C RISE, WITH TWO 2-1/2% TAPS ABOVE NORMAL VOLTAGE AND TWO 2-1/2% TAPS BELOW NORMAL VOLTAGE. ACCEPTABLE MANUFACTURERS ARE EATON-CUTLER HAMMER, ABB-GENERAL ELECTRIC, SIEMENS, AND SQUARE D.

2.04 FUSES

A. FUSES RATED ABOVE 600 AMPS SHALL BE UL CLASS L EQUAL TO BUSSMAN LOW-PEAK KRP-C. FUSES RATED AT 600 AMPS AND BELOW SHALL BE UL CLASS RK1 EQUAL TO BUSSMAN LOW-PEAK LPN-RK (250 VOLT) OR LPS-RK (600 VOLT).

PART 3 EXECUTION

3.01 GENERAL

A. MAINTAIN CODE REQUIRED WORKING CLEARANCES AROUND ALL ELECTRICAL EQUIPMENT. COORDINATE INSTALLATION WITH ARCHITECTURAL FEATURES, PIPING LOCATIONS, AND DUCTWORK.

B. ELECTRICAL EQUIPMENT SUCH AS SWITCHBOARDS, PANELBOARDS, DISCONNECTS, ENCLOSED CIRCUIT BREAKERS, INDUSTRIAL CONTROL PANELS, METER SOCKET ENCLOSURES, AND MOTOR CONTROL CENTERS, THAT ARE LIKELY TO REQUIRE EXAMINATION, ADJUSTMENT, SERVICING, OR MAINTENANCE WHILE ENERGIZED SHALL BE FIELD MARKED TO WARN QUALIFIED PERSONS OF POTENTIAL ELECTRIC ARC HAZARDS PER NEC 110.16. THE MARKING SHALL BE LOCATED AS TO BE CLEARLY VISIBLE TO QUALIFIED PERSONS BEFORE EXAMINATION, ADJUSTMENT, SERVICING, OR MAINTENANCE OF THE EQUIPMENT.

3.02 UNITIZED SWITHCGEAR/PANELBOARDS

A. INSTALL NEW UNITIZED SWITCHGEAR/PANELBOARDS AS INDICATED.

B. ALL PANELS SHALL HAVE ENGRAVED PLASTIC LABELS AND TYPEWRITTEN DIRECTORIES. DIRECTORIES SHALL DESCRIBE LOAD FOR EACH BRANCH CIRCUIT.

3.03 TRANSFORMERS

A. MOUNT TRANSFORMERS ON VIBRATION ISOLATORS. GROUND NEUTRAL OF SECONDARY SIDE TO COLD WATER PIPE AND BUILDING STEEL.

B. WHERE TRANSFORMERS ARE SHOWN MOUNTED ABOVE FLOOR, PROVIDE STRUCTURAL SUPPORTS AS REQUIRED. VERIFY CAPACITY OF WALL OR STRUCTURE TO SUPPORT SUSPENDED TRANSFORMERS.

C. PROVIDE MINIMUM 6" SPACE BEHIND AND BESIDE TRANSFORMER FOR AIR CIRCULATION/VENTILATION.

SECTION 16500 LIGHTING

PART 1 GENERAL

1.01 SUBMITTALS

A. LIGHTING FIXTURES

PART 2 PRODUCTS

2.01 GENERAL

A. PROVIDE LIGHTING FIXTURES AS SPECIFIED ON LIGHTING FIXTURE SCHEDULE OF SIZES, TYPES, RATINGS, AND WITH FEATURES INDICATED. FIXTURES SHALL BE PURCHASED FROM NATIONAL ACCOUNT VENDOR LISTED ON LIGHTING FIXTURES SCHEDULE. SUBSTITUTIONS ARE NOT ALLOWED.

B. FIXTURES SHALL BE COMPLETE WITH LAMPS, BALLASTS, DRIVERS, AND ALL PARTS, HARDWARE, AND ACCESSORIES FOR INSTALLATION AND PROPER OPERATION.

2.02 EMERGENCY LIGHTING BATTERY UNITS

A. MINIMUM 1500 LUMENS FOR 90 MINUTES WHETHER INTEGRAL OR REMOTE.

PART 3 EXECUTION

3.01 GENERAL

A. INSTALL FIXTURES AS INDICATED ON DRAWINGS. REFER TO REFLECTED CEILING PLAN FOR EXACT LOCATIONS.

END OF ELECTRICAL SPECIFICATIONS

ELECTRICAL LEGEND

MOUNTING HEIGHTS MEASURED TO ℄

- CONDUIT RUN CONCEALED IN WALL, CEILING, OR FLOOR
- CONDUIT RUN, CONCEALED IN FLOOR OR UNDERGROUND
- HOMERUN TO PANEL INDICATED
- RECEPTACLE, DUPLEX, 120V, 15A. UNO, @ 18" AFF TO BOTTOM
- RECEPTACLE, DUPLEX, 120V, 15A. UNO, SMH
- RECEPTACLE, QUADRAPLEX, 120V, 15A. UNO, @ 18" AFF TO BOTTOM
- RECEPTACLE, QUADRAPLEX, 120V, 15A. UNO, SMH
- RECEPTACLE, SINGLE, 250V, AMPS AS NOTED, @ 8" AFF TO BOTTOM
- RECEPTACLE, DUPLEX, 120V, 15A. UNO, CEILING MOUNTED
- (J) JUNCTION BOX, SIZE AS REQUIRED
- S SWITCH, SINGLE POLE, 120/277V, 20A, 48" AFF TO BOTTOM
- S_3 SWITCH, THREE WAY, 120/277V, 20A, 45" AFF TO BOTTOM
- (MS) MOTION SENSOR SWITCH
- W PHONE/DATA OUTLET, 4x4 BOX W/1"C TO ABOVE CL'G - @ 52" AFF TO BOTTOM
- PHONE/DATA OUTLET, 4x4 BOX W/1"C TO ABOVE CL'G - @ 15" AFF TO BOTTOM
- PHONE/DATA OUTLET, 4x4 BOX W/1"C TO ABOVE CL'G - SMH
- LIGHTING FIXTURES SEE FIXTURE SCHEDULE
- DISCONNECT SWITCH, NON-FUSED, DESCRIBED BY: VOLTAGE RATING/NO. OF POLES/SWITCH SIZE IN AMPS
- F DISCONNECT SWITCH, FUSED, DESCRIBED BY: VOLTAGE RATING/NO. OF POLES/FUSE SIZE IN AMPS
- S_M SWITCH, MOTOR STARTING, MANUAL, SIZE AS REQUIRED
- MOTOR STARTER, MAGNETIC, SIZE AS REQUIRED
- (M) MOTOR, SEE PANEL SCHEDULE FOR SIZE AND SERVICE

ABBREVIATIONS:

AFF	ABOVE FINISHED FLOOR
AFG	ABOVE FINISHED GRADE
BRKR	BREAKER
℄	CENTERLINE
CL'G	CEILING
EF	EXHAUST FAN
GFI	GROUND FAULT INTERRUPTER
MTD	MOUNTED
RTU	ROOF TOP UNIT
SMH	SPECIAL MOUNTING HEIGHT (4" ℄ ABOVE CASEWORK/BACKSPLASH OR 45" ℄ AFF IF NO CASEWORK/BACKSPLASH)
UNO	UNLESS NOTED OTHERWISE
WH	WATER HEATER
WP	WEATHERPROOF

PANEL SCHEDULE NOTES

G	GFI CIRCUIT BREAKER
HT	PROVIDE HANDLE TIE - POLES IN ()
R	PROVIDE RED RECEPTACLE FOR OUTLETS ON THIS CIRCUIT TO IDENTIFY CIRCUITS FOR COMPUTER LOADS ONLY. DO NOT PLUG REFRIGERATORS OR COMPRESSORS INTO THIS CIRCUIT.
LO	PROVIDE LOCK-ON/OFF DEVICE FOR CIRCUIT BREAKER
LZ-X	CIRCUIT TO BE CONTROLLED BY LIGHTING CONTROLS VIA RELAYS IN UNITIZED SWITCHGEAR
ST	BREAKER WITH SHUNT TRIP
BB	PROVIDE BUCK-BOOST TRANSFORMER FOR 240V OPERATION. FEDERAL PACIFIC #K1XGF16-0.5 OR EQUAL. MOUNT ADJACENT TO PANEL.

POWER MATRIX

	COMPUTER OUTLETS				OTHER OUTLETS				
LOCATION	IG	DEDICATED	DUPLEX	QUAD	120V DUPLEX		QUAD	IG	DED.
SERVICE COUNTER	X	X		X	X		X		
REGISTER	X	X		X	X		X		
RECEIVING	X	X		X	X		X		
PHONE/PA					X		X		X
FIRE ALARM/SECURITY					X	X(3)			X

ALL ISOLATED GROUND DEDICATED OUTLETS FOR THE COMPUTERS CAN BE ON ONE CIRCUIT. CASH REGISTERS ARE ALL RUN THROUGH POWER POLES. ALL OUTLETS ARE TO BE MOUNTED UNDER THE COUNTER TOP TO THE BACK OF THE COUNTER

PHONE BOARD SHALL BE A 4'X8' AREA LAID OUT ON THE PLYWOOD WALL OR ON A PIECE OF PLYWOOD. OUTLETS CAN BE SURFACED MOUNTED. BUT CONDUIT MUST BE RUN DOWN THE EDGES OF EACH SECTION. THE 120V DUPLEX IS A CONVENIENCE OUTLET RUN FROM ANY NON-DEDICATED CIRCUIT. EACH OUTLET IS TO BE CLEARLY LABELED "DEDICATED CPE", "DEDICATED TSC ALARMS" OR "CONVENIENCE OUTLET". ALL OUTLETS THAT ARE MOUNTED WITHIN 6 FEET OF SINK SHALL BE GFI

PROVIDE (3) DUPLEX RECEPTACLES AT THE ALARM/SECURITY SECTION OF THE PHONE BOARD. MOUNT 4" APART MINIMUM, 6" BELOW THE PHONE BOARD FOR CORD AND PLUG CONNECTIONS TO THE VENDOR SUPPLIED SECURITY SYSTEM EQUIPMENT. ALL THREE RECEPTACLES SHALL BE POWERED FROM ONE 120 VOLT DEDICATED CIRCUIT. PROVIDE TWO SURFACE MOUNTED JUNCTION BOXES ADJACENT TO THE DEDICATED DUPLEX RECEPTACLES FOR HARDWIRED POWER CONNECTIONS TO THE FIRE ALARM EQUIPMENT PANEL, DUCT MONITOR AND THE TWO FIRE ALARM SYSTEM POWER SUPPLIES. CONTRACTOR SHALL WIRE FROM THE JUNCTION BOXES WITH TYPE MC CABLE. CONNECT TWO DEVICES TO ONE JUNCTION BOX.

ALARM 3'	LEC 2'	CPE 3'
(3) DEDI. DUPLEX	DEDI QUAD	DEDI. QUAD

RISER NOTES:

1. FURNISH AND INSTALL 4' X 8' X 3/4 " PLYWOOD TELEPHONE EQUIPMENT BACKBOARD, PAINTED WHITE. FURNISH AND INSTALL GROUNDING TERMINAL STRIP ON BACKBOARD (SQUARE D #PK18GTA OR EQUIVALENT). FURNISH AND INSTALL 1 #6 COPPER GROUNDING CONDUCTOR IN 1/2 " FROM BACKBOARD GROUNDING TERMINAL TO ELECTRIC SERVICE GROUNDING ELECTRODE.
2. FURNISH AND INSTALL GROUNDING ELECTRODE AND GROUNDING ELECTRODE CONDUCTOR FOR SERVICE ENTRANCE PANELBOARD. CONNECTIONS AND BONDING JUMPERS SHALL BE INSTALLED IN ACCORDANCE WITH NEC ART. 250. REFER TO DETAIL 2/E4.0 ON THIS SHEET.
3. FURNISH AND INSTALL TWO 2" SCHEDULE 40 PVC CONDUITS FOR TELECOMMUNICATIONS SERVICE ENTRY RACEWAYS. RACEWAYS SHALL EXTEND FROM TELEPHONE EQUIPMENT BACKBOARD LOCATION TO SERVICE PROVIDER'S SPECIFIED POINT-OF-SERVICE. COORDINATE WITH LOCAL TELECOMMUNICATIONS SERVICE PROVIDER.
4. LIGHTING CIRCUITS SHALL BE CONTROLLED AS INDICATED IN PANEL SCHEDULES (DENOTED LZ-1A&B, LZ-2, ETC.) BY LIGHTING CONTROLLER VIA CONTACTORS.
5. COORDINATE CONNECTIONS TO THERMOSTATS WITH MECHANICAL CONTRACTOR. THERMOSTATS TO BE LOCATED ON THE SALES FLOOR COLUMNS.
6. COORDINATE INSTALLATION OF NEW UNDERGROUND SERVICE WITH LOCAL ELECTRIC UTILITY COMPANY. PROVIDE TRENCHING, CONDUIT, CONDUCTORS, METER BASE, CT ENCLOSURE, CONCRETE PAD, AND OTHER ITEMS AS REQUIRED. INSTALL SERVICE IN ACCORDANCE WITH CURRENT UTILITY COMPANY REQUIREMENTS.
7. CONTACTORS FOR CONTROL OF SALES FLOOR GENERAL LIGHTING.
8. NOTE NOT USED.
9. 2 SETS EACH WITH [4-#250KCMIL, #1G, 3-1/2"C] ALUMINUM TO SERVICE DISCONNECT .
10. 3#2, #6G; 1-1/4"C COPPER TO TRANSFORMER.
11. 4#4/0, #4G; 2-1/2"C COPPER TO PANEL B FROM TRANSFORMER. ROUTE CONDUIT ABOVE IT ROOM AND NOT DOWN EXTERIOR WALL ADJACENT TO IT ROOM.
12. GROUND PER NEC.
13. SERVICE EQUIPMENT SHALL BE LEGIBLY MARKED IN THE FIELD WITH MAXIMUM AVAILABLE FAULT CURRENT. CONTRACTOR SHALL REQUEST THE MAXIMUM AVAILABLE FAULT CURRENT AT THE TRANSFORMER AND PROVIDE THIS INFORMATION ALONG WITH THE DISTANCE OF THE SECONDARY CONDUCTORS TO THE ELECTRICAL ENGINEER. THE ELECTRICAL ENGINEER WILL CALCULATE THE MAXIMUM AVAILABLE FAULT CURRENT AT THE SERVICE EQUIPMENT AND GIVE RESULTS TO CONTRACTOR FOR MARKING.
14. SERVICE ENTRANCE: 2 SETS EACH WITH [4-#250KCMIL, 3-1/2"C] ALUMINUM TO UTILITY TRANSFORMER.
15. SERVICE DISCONNECT, 480V, 3 POLE, FUSED @400A, S.E. RATED, NEMA 3R, 100K AIC.
16. DISCONNECT, 480V, 3 POLE, NON-FUSED, 100A.
17. WALL MOUNT 10'-0" AFF PER DETAIL 4 ON E3.1 UNLESS REQUIRED TO BE FLOOR MOUNTED BY THE AHJ.

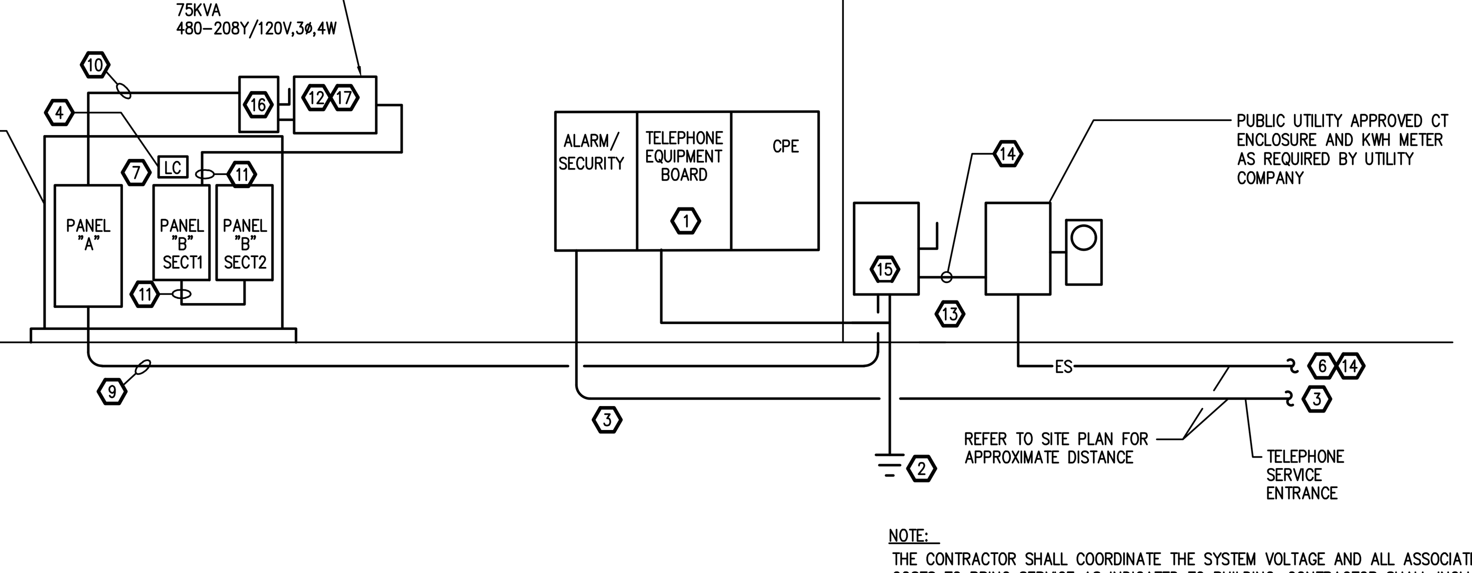

1 E4.0 **POWER RISER DIAGRAM - 480/277V, 3ø, 4W, 400A**
SCALE: N.T.S.

NOTE:
THE CONTRACTOR SHALL COORDINATE THE SYSTEM VOLTAGE AND ALL ASSOCIATED COSTS TO BRING SERVICE AS INDICATED TO BUILDING. CONTRACTOR SHALL INCLUDE ALL COSTS IN BID AND SHALL COORDINATE ALL ELECTRICAL EQUIPMENT AND EQUIPMENT PROVIDED BY OTHER TRADES REQUIRING ELECTRICAL ROUGH-IN WITH SERVICE VOLTAGE USED PRIOR TO BID. CONTRACTOR SHALL ESTABLISH SERVICE IN CONTRACTOR'S NAME AND TRANSFER SERVICE TO TSC UP ON TURN OVER TO TSC.

GENERAL ELECTRICAL NOTES

1. VISIT PROJECT SITE BEFORE SUBMISSION OF BID AND BECOME FAMILIAR WITH EXISTING CONDITION AND LOCATIONS OF UTILITIES.
2. COORDINATE INSTALLATION OF NEW SERVICE WITH LOCAL ELECTRIC UTILITY COMPANY. PROVIDE TRENCHING, CONDUIT, METER BASE, CONCRETE PAD, AND OTHER ITEMS AS REQUIRED. INSTALL SERVICE IN ACCORDANCE WITH CURRENT UTILITY COMPANY REQUIREMENTS.
3. COORDINATE INSTALLATION OF TELEPHONE SERVICE CONDUIT WITH LOCAL TELEPHONE COMPANY. INSTALL (2) 2" CONDUITS FROM TELEPHONE SERVICE POINT TO TELEPHONE TERMINAL BOARD.
4. FURNISH AND INSTALL A 4'X 8'X 3/4" PLYWOOD TELEPHONE TERMINAL BOARD, PAINTED WHITE. FURNISH AND INSTALL GROUNDING TERMINAL STRIP ON BACKBOARD (SQUARE D #PK18GTA OR EQUIVALENT). FURNISH AND INSTALL 1 #6 COPPER GROUNDING CONDUCTOR IN 1/2" CONDUIT FROM BACKBOARD GROUNDING TERMINAL TO ELECTRICAL SERVICE GROUNDING ELECTRODE.
5. INSTALL 1" CONDUIT FROM EACH TELEPHONE AND/OR DATA OUTLET TO ABOVE NEAREST ACCESSIBLE CEILING WITH AN INSULATED BUSHING ON EACH END.
6. PROVIDE CONTROL POWER SOURCE FOR ALL STARTERS AND CONTROL PANELS NOT SUPPLIED WITH CONTROL POWER TRANSFORMERS. INSTALL AND CONNECT ALL CONTROL DEVICES IN ACCORDANCE WITH MANUFACTURERS' RECOMMENDATIONS.
7. VERIFY ELECTRICAL POWER REQUIREMENTS FOR ALL EQUIPMENT. PROVIDE CIRCUITS AND FUSES SIZED IN ACCORDANCE WITH MANUFACTURERS' RECOMMENDATIONS.
8. MAINTAIN CODE REQUIRED WORKING CLEARANCE AT ALL ELECTRICAL PANELS, DISCONNECT SWITCHES, AND STARTERS.
9. PROVIDE DISCONNECT SWITCH FOR ANY HARDWIRED EQUIPMENT NOT SUPPLIED WITH DISCONNECTING MEANS.
10. SEE MECHANICAL DRAWINGS AND SPECIFICATIONS FOR LOCATIONS AND CONTROL REQUIREMENTS FOR MECHANICAL EQUIPMENT AND FOR STARTERS, DISCONNECT SWITCHES AND CONVENIENCE RECEPTACLES THAT MAY BE FURNISHED WITH THE EQUIPMENT.
11. COORDINATE EXACT LOCATION OF ALL CEILING MOUNTED LIGHT FIXTURES WITH ARCHITECTURAL DRAWINGS. PROVIDE FIXTURES COMPATIBLE WITH CEILING TYPE INSTALLED.
12. LIGHTING FIXTURES FOR EMERGENCY USE SHALL BE PROVIDED WITH INTEGRAL BATTERY. THOSE FIXTURES SHALL BE CIRCUITED SUCH THAT THEY AUTOMATICALLY SWITCH TO BATTERY OPERATION UPON FAILURE OF POWER TO CIRCUIT. EXIT LIGHTS SHALL BE UNSWITCHED.
13. ALL RECEPTACLES ON DEDICATED CIRCUITS SHALL BE RATED NO LESS THAN CIRCUIT OVERCURRENT DEVICE.
14. PROVIDE UL LISTED TECHNIQUES FOR PENETRATIONS OF RATED WALL AND CEILING WITH CONDUIT OR OPEN WIRING. SEE ARCHITECTURAL DRAWINGS FOR WALL AND CEILING RATINGS.
15. INSTALL ELECTRICAL BOXES LOCATED ON OPPOSITE SIDES OF RATED WALLS SUCH THAT THEY ARE SEPARATED BY A HORIZONTAL DISTANCE OF 24 INCHES MINIMUM.

TRACTOR SUPPLY LIGHTING & HEATING SCHEDULE

	PYLON/BUILDING SIGN PARKING LOT LIGHTS	BUILDING LIGHTS WALL PACKS	BUSINESS LIGHTS	EMPLOYEE LIGHTS	HEATING	COOLING	SUNDAY
ON	DUSK (BY PHOTOCELL)	DUSK TO DAWN PHOTOCELL (ALWAYS ON DURING DARK)	7:30 AM	7:30 AM	68 DEGREES AT 8:00 AM	74 DEGREES AT 8:00 AM	SAME TEMPS AT 10:00 AM
OFF	9:15 PM	DURING THE DAY	8:30 PM	8:30 PM	62 DEGREES AT 9:00 PM	80 DEGREES AT 9:00 PM	SAME TEMPS AT 6:00 PM
LIGHTING CONTROL ZONE	LZ-3	LZ-2	LZ-1B	LZ-1A			
NOTES: CONTROL ZONE	THE SYSTEM CAN BE OVERRIDDEN BY THE OVERRIDE SWITCH IN CASE THE STORE IS OPEN EARLIER OR LATER THAN NORMAL STORE HOURS.						

LZ-X DENOTES LIGHTING CONTROL ZONE VIA CONTACTOR IN THE UNITIZED SWITCHGEAR.
GC REPONSIBLE FOR PROGRAMMING ALL THERMOSTATS AND LIGHTING CONTROLS.
LIGHTSTAT TME THERMOSTAT MODEL TME-DGC. SEE MECHANICAL PLANS FOR MORE INFORMATION.

BIDDING MECHANICAL AND ELECTRICAL CONTRACTORS SHALL COORDINATE WITH GC PRIOR TO BID ON ALL WORK AS IT RELATES TO THE PROGRAMMING OF NON-EMS THERMOSTATS AND LIGHT TIMERS.

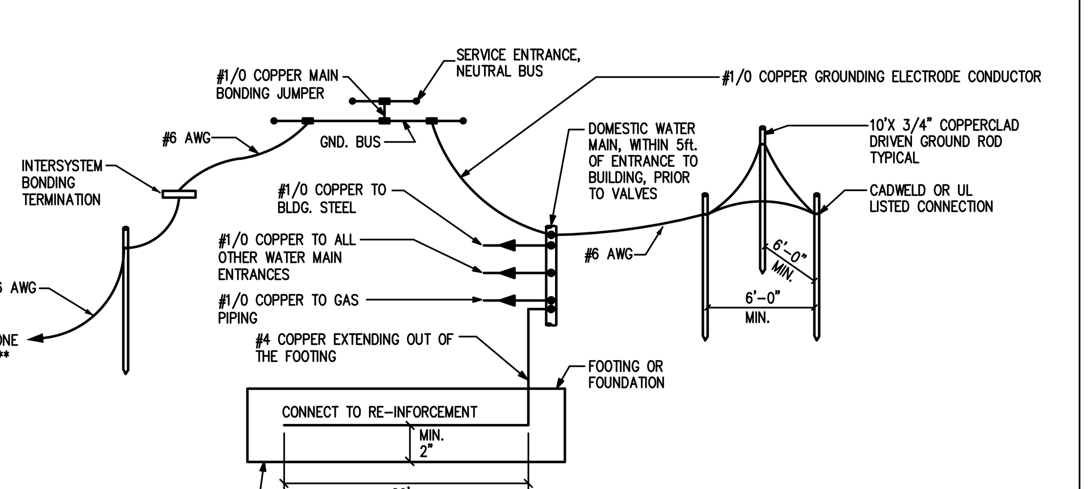

2 E4.0 **SERVICE ENTRANCE GROUNDING**
SCALE: N.T.S.

NOTE: ALL GROUNDING ELECTRODE CONDUCTORS SHALL BE SIZED IN ACCORDANCE WITH NEC 250.66. ALL METAL CONDUIT SHALL BE BONDED TO TERMINATING BOXES.

** SEPERATE GROUND ROD REQUIRED ONLY IF TELEPHONE SERVICE BOARD IS GREATER THAN 20 FEET FROM ELECTRICAL SERVICE

VOLTAGE: 480/277V., 3PH., 4W. | MAIN BKR: --- | BUS: 400 AMP MLO | A.I.C.: 35 K | INTEGRATED MOUNTED

**-VERIFY SIGN VOLTAGE WITH VENDOR

NOTE	DESCRIPTION	KVA/PHASE A	B	C	WIRE SIZE	BKR AMPS	CKT #	CKT #	BKR AMPS	WIRE SIZE	KVA/PHASE A	B	C	DESCRIPTION	NOTE
LZ-1A	L-SALES	2.2			12	20	1	2	20	10	3.0			L-NL/EMERG	LO
LZ-1B	L-SALES		2.3		12	20	3	4	20	12		0.4		L-OFFICE/RESTROOMS	
LZ-1A	L-SALES			1.1	12	20	5	6	20	12			0.6	L-STOCKROOM	LZ-1A
LZ-1B	L-SALES	1.5			12	20	7	8	20	--	0			SPARE	
LZ-1A	L-SALES		1.3		12	20	9	10	20	10		0.7		L-WALL PACK	LZ-2
LZ-1A	L-FEED STORAGE			0.5	12	20	11	12	20	10			1.5	FUTURE BUILDING SIGN	LZ-3 **
LZ-1A	L-LIVE GOODS CENTER	0.5			12	20	13	14	20	12	0.2			BUILDING LIGHTS	LZ-3
	SPARE		0		--	20	15	16	20	6		1.2		PYLON SIGN	LZ-3 **
	SPARE			0	--	20	17	18	20	10			1.5	BUILDING SIGN	LZ-3 **
	SPARE	0			--	20	19	20	20	--	0			SPARE	
LZ-3	L-SIDE/PARKING LOT		2.1		6	20	21	22	20	--		0		SPARE	
	SPARE			0	--	20	23	24	20	--			0	SPARE	
	SPARE	0			--	20	25	26	20	--	0			SPARE	
	SPARE		0		--	20	27	28	20	--		0		SPARE	
	SPARE			0	--	20	29	30	20	--			0	SPARE	
	SPARE	0			--	20	31	32	20	--	0			SPARE	
	SPARE		0		--	20	33	34	20	--		0		SPARE	
	SPARE			0	--	20	35	36	20	--			0	SPARE	
	SPARE	0			--	20	37	38	20	--	0			SPARE	
	SPARE		0		--	20	39	40	20	--		0		SPARE	
	SPARE			0	--	20	41	42	20	--			0	SPARE	
	RTU-1	6.1			10	30	43	44	15	12	2.4			RTU-5	
			6.1		10		45	46		12		2.4			
				6.1	10		47	48		12			2.4		
	RTU-2	9.8			6	50	49	50	50	6	5.8			BALER	
			9.8		6		51	52		6		5.8			
				9.8	6		53	54		6			5.8		
	RTU-3	9.8			6	50	55	56	100	2	23.8			PANEL "B" VIA 75KVA TRANSFORMER	
			9.8		6		57	58		2		22.9			
				9.8	6		59	60		2			17.5		
	RTU-4	9.8			6	50	61	62	100	--	0			SPACE	
			9.8		6		63	64		--		0			
				9.8	6		65	66		--			0		
		39.7				PANEL "A"					35.2			A:	74.9 KVA
			41.2									33.4		B:	74.6 KVA
				37.1									29.3	C:	66.4 KVA
														TOTAL:	215.9 KVA

VOLTAGE: 208/120V., 3PH., 4W. | MAIN BKR: 225/3 | BUS: 225 AMP --- | A.I.C.: 10 K | INTEGRATED MOUNTED

TWO SECTION PANEL WITH FEED-THRU LUGS

NOTE	DESCRIPTION	KVA/PHASE A	B	C	WIRE SIZE	BKR AMPS	CKT #	CKT #	BKR AMPS	WIRE SIZE	KVA/PHASE A	B	C	DESCRIPTION	NOTE
HT(3)	R-LOUNGE POWER	1.5			12	20	1	2	20	12	1.0			R-TOILETS/EWC	G
HT(3)	R-MANAGER OFFICE		1.1		12	20	3	4	20	12		1.6		R-SECURITY/ALARMS	R,LO
HT(3)	R-LOUNGE			0.2	12	20	5	6	20	--			0	SPARE	
G	ANIMAL HLTH COOLER	1.7			12	20	7	8	20	12	1.1			R-SALES FLOOR	HT(2)
	DOCK DOOR OPERATOR		1.2		12	20	9	10	20	12		0.4		R-EXTERIOR	HT(2)
	R-SALES FLOOR			1.3	12	20	11	12	20	12			0.6	POWER POLE REC/CASH	R, HT(3)
	AUTO ENTRY DOORS	0.7			12	20	13	14	20	12	0.6			POWER POLE REC/CASH	HT(3)
	SPARE		0		--	20	15	16	20	12		0.4		POWER POLE CASHWRAP	HT(3)
	INST. WATER HEATER			0.5	12	20	17	18	20	12			1.8	COMPRESSOR - STKRM	
	R-CLOTHING	1.2			12	20	19	20	20	12	0.4			R-OPEN SIGN	
	R-ROOF		0.9		12	20	21	22	20	12		0.4		R-TELE. TERM. BOARD	R.
	SPARE			0	--	20	23	24	20	12			0.8	R-IT RACK	R.
	SPARE	0			--	20	25	26	20	12	0.4			R-TELE. TERM. BOARD	R.
	R-MOBILE POS		1.4		12	20	27	28	20	12		1.8		R-FLOOR SCRUBBER	
LO	ELECTRIC GONG			0.2	12	20	29	30	20	12			0.8	POWER POLE CASHIER	R, HT(2)
	EMS POWER	0.5			12	20	31	32	20	12	1.4			POWER POLE CASHIER	HT(2)
	TOILET EF/RELAY		0.5		12	20	33	34	20	12		0.5		POWER POLE SLF CK	
	R-EAS			0.8	12	20	35	36	20	8			1.0	PROPANE DISPENSING SYSTEM	BB, ST
	IRRIGATION CONTROLLER	0.2			12	20	37	38		8	1.0				
G	R-CHICK DAYS		1.8		12	20	39	40		12		0		SHUNT TRIP	
	R-CHAINSAW POG			0.4	12	20	41	42	20	12			0.1	PROPANE SHUNT PWR	
	LIGHTING CONTROLS	0.5			12	20	43	44	20	12	1.7			HAND DRYER	LO
G	MICROWAVE		1.2		12	20	45	46	20	12		1.7		HAND DRYER	LO
G	PET DRYER			1.7	12	20	47	48	20	12			1.7	PET DRYER	G
	POWER DROP-FIX LTG	1.6			12	20	49	50	20	12	1.2			POWER DROP-FIX LTG	
	POWER DROP-FIX LTG		1.6		12	20	51	52	20	--		0		SPARE	
	POWER DROP-FIX LTG			0.8	12	20	53	54	20	--			0	SPARE	
	POWER DROP-FIX LTG	1.6			12	20	55	56	20	--	0			SPARE	
G	R-CHICK DAYS		1.8		12	20	57	58	20	--		0		SPARE	
	POWER POLE REGISTER			0.8	12	20	59	60	20	--			0	SPARE	
	AUTO ENTRY DOOR	0.7			12	20	61	62	20	--	0			SPARE	
	OVERHEAD DOOR		1.2		12	20	63	64	20	--		0		SPARE	
	R-CHICK DAYS			1.8	12	20	65	66	20	12			0.5	R-LIVE GOODS	
	SLIDING GATE	0.9			8	20	67	68	20	12	0.4			R-EAS	
			0.9		8		69	70	20	12		0.8		R-HUB TV'S	
	SPARE			0	--	20	71	72	20	--			0	SPARE	
	R-CHICK DAYS	1.8			12	20	73	74	20	--	0			SPARE	
	SPARE		0		--	20	75	76	20	--		0		SPARE	
	SPARE			0	--	20	77	78	20	--			0	SPARE	
	SPARE	0			--	20	79	80	30	10	1.7			FORKLIFT CHARGER	
	SPARE		0		--	20	81	82		10		1.7			
	SPARE			0	--	20	83	84		10			1.7		
		12.9				PANEL "B"					10.9			A:	23.8 KVA
			13.6									9.3		B:	22.9 KVA
				8.5									9.0	C:	17.5 KVA
														TOTAL:	64.2 KVA

ELECTRICAL CONTRACTOR TO INSTALL AND WIRE FIRE GONG, COORDINATE WITH FIRE SUPPRESSION CONTRACTOR FOR VOLTAGE. PROVIDE LOW VOLTAGE TRANSFORMER AS REQUIRED.

PRELIMINARY
NOT FOR CONSTRUCTION

OXFORD ARCHITECTURE
2934 Sidco Drive
Suite 120
Nashville, TN 37204
Architecture
Planning
Interior Architecture

PE
PARSONS ENGINEERING, INC.
NASHVILLE, TENNESSEE
PARSONSENGINEERING.COM

TSC
TRACTOR SUPPLY COMPANY
BOUTTE
LOUISIANA

This drawing and the design shown is the property of the architect. The reproduction, copying or use of this drawing without their written consent is prohibited and any infringement will be subject to legal action

Job Number: 2428

Date: 07.23.2024

Revisions:

Revisions:

Revisions:

ELEC LEGEND & DETAILS

Sheet Number: E4.0

Project: 24159 Drawing: 24159-E4.0.dwg

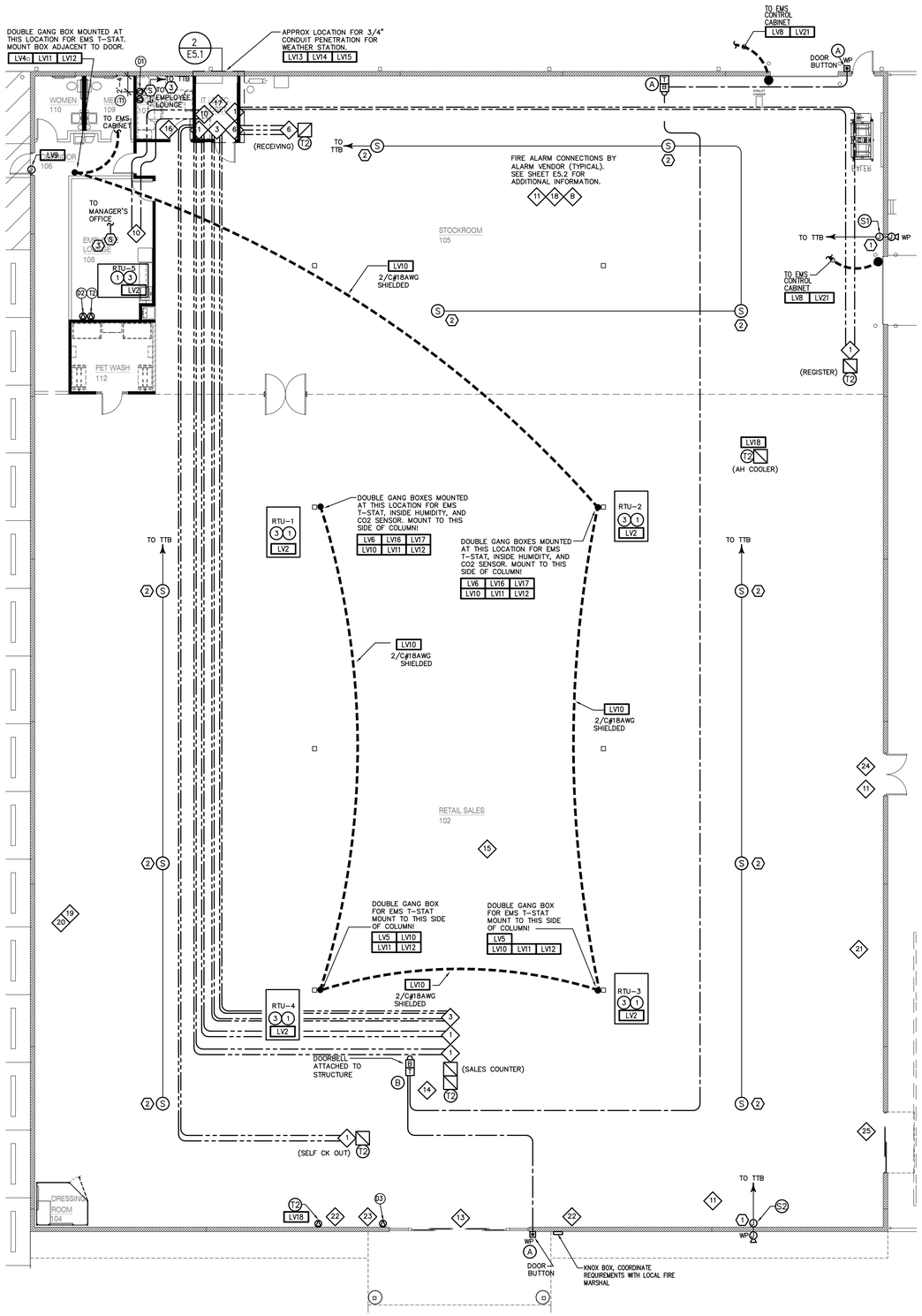

1 E5.0 **SYSTEMS FLOOR PLAN**
SCALE: 1/8" = 1'-0"

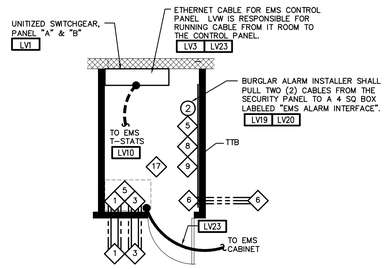

2 E5.0 **ENLARGED PLAN - IT ROOM**
SCALE: 1/4" = 1'-0"

SEE SHEET E5.1 FOR NOTES ASSOCIATED WITH THIS SHEET.

PRELIMINARY
NOT FOR CONSTRUCTION

OXFORD ARCHITECTURE
2934 Sidco Drive
Suite 120
Nashville, TN 37204
Architecture
Planning
Interior Architecture

PARSONS ENGINEERING, INC.
NASHVILLE, TENNESSEE
PARSONSENGINEERING.COM

TRACTOR SUPPLY COMPANY
BOUTTE
LOUISIANA

This drawing and the design shown is the property of the architect. The reproduction, copying or use of this drawing without their written consent is prohibited and any infringement will be subject to legal action

Job Number: 2428
Date: 07.23.2024
Revisions:
Revisions:
Revisions:

SYSTEMS FLOOR PLAN
Sheet Number: E5.0

Project: 24159 Drawing: 24159-E5.0.dwg

TSC LVW CONTROL WIRING AND EMS PREWIRE:

ALL LOW VOLTAGE WIRING (LVW) (EXCEPT FOR TEMPORARY AND PERMANENT THERMOSTATS FOR HVAC) TO BE INSTALLED BY THE LVW VENDOR. THIS INCLUDES THE DOOR BELLS. GC'S ARE RESPONSIBLE TO COMMUNICATE, TO MANAGE, AND TO INCLUDE THIS IN THEIR COSTS.

Cable Specifications:
All cable must be jacketed in a fire-retardant material, shielded (unless otherwise noted) and WHITE in color. In the event that a specific cable is not available, Contractor may substitute for a cable with more conductors (i.e. 2 conductor can be substituted with 3 conductor of the same ratings).

Maximum cable length shall not exceed 330 feet.

Do not route cables over or touching a fluorescent light. Cross over fluorescent lights perpendicular to the length of the fixture.

All cables shall be supported from the ceiling joist above. Do not lay cables on the grid of a drop ceiling.

Type
one twisted pair – 18ga – shielded – plenum rated – white jacket
one CAT5 Cable

Preface: This store will be wired for a future EMS system This contractor shall price in the base bid wiring.

LV1 G.C. shall install a 2" EMT conduit into the top of the future EMS section of the unitized switchboard (hereafter referred to as the EMS cabinet) so as to provide EMS cable access to the panel without having to route the cables past substantial line voltage wire.

LV2 G.C. shall provide a 3/4" (inch) trade size rigid conduit or seal tight from the RTU control panel stubbed into the TSC space for low voltage wiring access.

LV3 Tractor Supply shall provide EMS jack in one of 6– up boxes in the IT CLOSET and an orange patch, with white boot, cable connected to port 23 on the 2960 switch and run to port #46 on the patch panel.

LV4 G.C. shall install a recessed single gang switch box in corridor next to manager's office – see mechanical drawings for exact placement. This box should be mounted 60" AFF. This box is for installation of the RTUS thermostat / future EMS control thermostat.

LV5 G.C. shall install a double gang switch box (4 11/16" with the appropriate adapter plates) on the column closest to each sales floor RTU 1 and 2 for the purpose of installing the Thermostat /future EMS thermostat (see LV6 for specifics about RTU 3 and 4). If HVAC is needed to condition the building prior to the installation of the LVW by the TSC LVW vendor, the G.C. is to make HVAC units operable using temporary bi-metal thermostats to be hung in return air duct. This allows for conditioning of the building temporarily until the TSC LVW vendor installs permanent LVW per the timing and action calendar contained within the set of plans. Once the LVW vendor installs the LVW, the G.C. is responsible to remove the temporary bi-metal thermostats and make final connections of the thermostats to the newly installed LVW as mentioned above.

LV6 G.C. shall install 3 double gang switch boxes (4 11/16" with the appropriate adapter plates) on the column closest to RTU 3 and 4. These 3 boxes shall be mounted vertically; one above the other, separated by no less than 6" with the bottom box mounted at a height of approximately 7' 6" AFF and MUST be mounted to the surface of the column that faces the center of the building so as to shield the sensor from direct supply air. A quantity of (2) 1" (inch) conduits shall be installed above & between the boxes so as to provide a path for continuous wire pull from the overhead into the bottom most box. These boxes are for (from top to bottom) the installation of the CO2 sensor, the humidity sensor, and the RTU thermostat / future EMS thermostat in the bottom box each of which requires a dedicated double gang box. "Doubling up" the sensors in a 2 gang box is not acceptable.

LV7 G.C. shall install a single gang box and a 3/4" EMT conduit for the vestibule Unit Heater and the greenhouse's Unit Heater. The conduits shall be installed from the ceiling deck to each unit heater's thermostat designated mounting location in the vestibule and stockroom. G.C. is to make each unit heater operate using the thermostats provided with the unit heaters and installed wiring.

LV8 G.C. shall install a 3/4" EMT conduit from the ceiling deck to 12" (inches) AFF so as to provide future EMS cable access for routing the LV cable from above the dock door to the finished floor. The conduit is to be installed directly adjacent to the dock door, within 2" (inches) of the rollup door track.

LV9 J-box for power to the series 800 power supply mounted above the ceiling in line with the hinge side of the door. Provide a 1/2" conduit from the power supply to the electric power transfer device (PT-5) of the door frame, concealed mortise mount. Provide and pull two #18 AWG wire from the power supply to the power transfer device and into the door. Contractor to complete wiring and connection of the delayed rim exit device after new door and rim exit hardware is installed. Coordinate all requirements with supplier/installer. See detail 12/E3.2.

LV10 LVW vendor shall install a total of (1) 18/2 SHIELDED plenum cable. The cable shall be pulled continuous from the future "EMS Cabinet" in the electrical switchgear to each Unit Heater's & RTU's thermostat gang boxes location (see LV5 and LV6 for specifics) in turn (Daisy Chain) starting with the Unit Heater / RTU thermostat mounting location closest to the electrical room. The wire shall be pulled into the RTU's designated gang box, leaving a 5' coil. Label both un-spliced ends of this cable pull as "TStat COMM".

LV11 LVW vendor shall install a total of (1) 18/10 NON-SHIELDED plenum cable. The cable shall be pulled from each RTU's control cabinet to the RTU specific thermostat gang box, leaving a 5' coil at both ends. Label both ends of this cable "RTUx CONTROL", where x is the RTU #.

LV12 LVW vendor shall install a total of (1) 18/10 NON-SHIELDED plenum cable. The cable shall be pulled from each RTU's supply hard air duct, just below ceiling, to the corresponding RTUs thermostat gang box, leaving a 10' coil at both ends. Label both ends of this cable "RTUx SUPPLY", where x is the RTU #.

LV13 LVW vendor shall install a total of (1) 18/10 NON-SHIELDED plenum cable. The cable shall be pulled from the EMS cabinet to the future "WeatherStation", leaving a 5' coil at both ends. Label both ends of this cable "OA TEMP".

LV14 LVW vendor shall install a total of (1) 18/10 NON-SHIELDED plenum cable. The cable shall be pulled from the EMS cabinet to the future "WeatherStation", leaving a 5' coil at both ends. Label both ends of this cable "OA HUMID".

LV15 LVW vendor shall install a total of (1) 18/10 NON-SHIELDED plenum cable. The cable shall be pulled from the EMS cabinet to the future "WeatherStation", leaving a 5' coil at both ends. Label both ends of this cable "OUTDOOR LIGHT LEVEL".

LV16 For each indoor humidity sensor specified, the LVW vendor shall install a total of (1) 18/4 NON-SHIELDED plenum cables. The cables shall be pulled from the EMS cabinet to the top single gang box installed as per note LV6, leaving a 5' coil at both ends. Label both ends of this cable "INSIDE HUMID #1" and, if installed, "INSIDE HUMID #2".

LV17 LVW vendor shall install a total of (1) 18/2 NON-SHIELDED plenum cable. The cables shall be pulled from the EMS cabinet to the next to the top single gang box installed as per note LV6, leaving a 5' coil at both ends. Label both ends of this cable "CO2".

LV18 LVW vendor shall install a total of (1) 18/2 NON-SHIELDED plenum cable in 1/2" conduit. The cable shall be pulled from the EMS cabinet to the vaccine case, leaving a 5' coil at both ends. Label both ends of this cable "VACCINE TEMP". Coordinate with the GC to determine the exact location. NOTE: IN THE EVENT THAT THE FINAL LOCATION OF THE ANIMAL HEALTH CASE IS UNKNOWN, LEAVE A 50' COIL OF CABLE IN THE APPROXIMATE LOCATION.

LV19 LVW vendor shall install a total of (1) 18/4 NON-SHIELDED plenum cable. The cables shall be pulled from the EMS cabinet to the alarm installer's junction box labeled "EMS/SI ALARM INTERFACE" (located on the telephone board, beside the security alarm panel), leaving a 5' coil of each at both ends. Label both ends of each these cables "OCCUPANCY" and "ALL LIGHTS ON" respectively. If the security system installer has not installed this junction box, install and label these cables leaving a 15' loop of each at the ceiling joist on the vicinity of the building security system equipment.

LV20 ALARM VENDOR shall install a total of two twisted pair, 18ga plenum cables (Windy City # 002320-S or equivalent). The cables shall be pulled from the Security Panel to the junction box labeled "EMS/SI ALARM INTERFACE" (located on the telephone board, at the designated location beside the security alarm panel). ALARM VENDOR to terminate this wiring to the appropriate security system "ARM/DISARM" and "ALARM" outputs to the corresponding terminals within the "EMS/SI Alarm interface" junction box (installed by the LVW vendor). If the LVW Vendor has not installed this junction box, ALARM VENDOR to install and label their cables leaving a 5' loop at the designated location of the EMS/SI ALARM interface" on the telephone backboard.

LV21 LVW vendor shall install a total of (1) 18/2 NON-SHIELDED plenum cable. The cable shall be pulled from the EMS cabinet through the EMT conduit installed for dock door monitoring, leaving a 5' coil at both ends. Label both ends of this cable "DOCK DOOR". This is used for future EMS monitoring and is in addition to the cabling required for the security system door monitoring. This EMS cable should be pulled down through the conduit that is installed to monitor the dock door via the EMS (see LV8). Coordinate with the GC to determine the exact location. NOTE: IN THE EVENT THAT THE FINAL LOCATION OF THE DOCK DOOR EMS CONDUIT IS UNKNOWN, LEAVE A 50' COIL OF CABLE ABOVE THE DOCK DOOR.

LV22 LVW Vendor to install a total of (1) 18/4 NON-SHIELDED plenum cable for each unit heater. The cable shall be pulled from each Unit Heater's control cabinet to the Unit Heater's specific thermostat gang box, leaving a 5' coil at both ends. Label both ends of this cable "UH Control". Note: In the event that the location of the unit heater is unknown, leave a 50' coil of cable at this location.

LV23 LVW VENDOR to provide a CAT5 cable run from the patch panel in the IT CLOSET to the future EMS cabinet location.

PUBLIC ADDRESS SYSTEM:

GENERAL NOTES:

A. TSC SHALL FURNISH & INSTALL THE PUBLIC ADDRESS SYSTEM
B. LVW VENDOR SHALL PROVIDE ALL SPEAKER WIRING. SPEAKER WIRING SHALL BE 18AWG / 2 CONDUCTOR WITH WHITE JACKETS.
C. ALL CABLES ROUTED EXPOSED IN CEILING JOIST SHALL BE RUN PERPENDICULAR AND PARALLEL TO THE CEILING JOIST ORIGINATING FROM TELEPHONE BOARD.
D. PUBLIC ADDRESS SYSTEM DEVICES SHOWN FOR REFERENCE ONLY. GENERAL CONTRACTOR SHALL FURNISH AND INSTALL JUNCTION BOXES AND RACEWAYS PER THE PUBLIC ADDRESS SYSTEM VENDOR RECOMMENDATIONS. PUBLIC ADDRESS SYSTEM DEVICES FURNISHED AND INSTALLED BY THE SYSTEM VENDOR.
E. LVW VENDOR SHALL BE RESPONSIBLE FOR DETERMINING IF CABLES SHALL BE PLENUM RATED TO MEET CODES.

PUBLIC ADDRESS SPEAKER CABLE- (S1) (S2)

1. PROVIDE A BLACK 4" X 4" WEATHERPROOF JUNCTION BOX AT THE EXTERIOR SPEAKER LOCATION MOUNTED 13'-0" AFF OR ABOVE THE AWNING. PROVIDE A SLEEVE THRU WALL TO THE INTERIOR 4" x4" JUNCTION BOX LOCATED ON THE INTERIOR WALL. COORDINATE EXACT MOUNTING HEIGHTS AND LOCATIONS WITH THE ARCHITECTURAL DRAWINGS PRIOR TO ROUGH-IN.
2. PROVIDE JUNCTION BOX AND CONDUIT (1" EMT) FROM EXTERIOR SPEAKER TO THE RETAIL SALES INTERIOR WALL.

KEYED NOTES:

1. JUNCTION BOX ON WALL WITH 1" CONDUIT STUBBED OUTSIDE FOR SPEAKER MOUNTING. COORDINATE EXACT REQUIREMENTS WITH PUBLIC ADDRESS SYSTEM PRIOR TO ROUGH-IN. ROUTE ONE TWO CONDUCTOR #18 AWG SPEAKER WIRE FROM JUNCTION BOX TO TELEPHONE BOARD. COIL 6 FEET OF SPEAKER WIRE OUTSIDE OF BUILDING AT PROPOSED SPEAKER LOCATION. PROVIDE 20 FEET OF CABLE AT THE CEILING ABOVE THE TELEPHONE BOARD. COIL 15 FEET OF CABLE AND SUSPEND 10 FEET AFF. TYPICAL OF 2 LOCATIONS.
2. LOCATION IN BAR JOIST FOR PUBLIC ADDRESS SPEAKER. ROUTE ONE TWO CONDUCTOR #18 AWG SPEAKER WIRE BETWEEN LOCATIONS LEAVING SIX FEET OF COILED WIRING AT EACH LOCATION FOR CONNECTION OF SPEAKERS. COORDINATE EXACT REQUIREMENTS WITH PUBLIC ADDRESS SYSTEM PRIOR TO ROUGH-IN. HOME RUN SPEAKER CABLE FROM LAST DEVICE LOCATION AS SHOWN AND PROVIDE 20 FEET OF CABLE AT THE CEILING ABOVE THE TELEPHONE BOARD. COIL 15 FEET OF CABLE AND SUSPEND AT 10 FEET AFF.
3. LOCATION IN SUSPENDED CEILING FOR PUBLIC ADDRESS SPEAKER. ROUTE ONE TWO CONDUCTOR #18 AWG SPEAKER WIRE BETWEEN LOCATIONS LEAVING SIX FEET OF COILED WIRING AT EACH LOCATION FOR CONNECTION OF SPEAKERS. COORDINATE EXACT LOCATION AND REQUIREMENTS WITH ARCHITECTURAL REFLECTED CEILING PLAN AND THE PUBLIC ADDRESS SYSTEM INSTALLER PRIOR TO ROUGH-IN. HOME RUN SPEAKER CABLE FROM LAST DEVICE AS SHOWN AND PROVIDE 20 FEET OF CABLE AT THE CEILING ABOVE THE TELEPHONE BOARD. COIL 15 FEET OF CABLE AND SUSPEND AT 10 FEET AFF.

LOW VOLTAGE DOOR BELL SYSTEM:

GENERAL NOTES:

A. ALL LOW VOLTAGE WIRING BY LVW VENDOR (DOOR BELL, ETC.) SHALL BE 18AWG / 2 CONDUCTOR WITH WHITE TEFLON JACKET IN CONDUIT TO CEILING AND EXPOSED ALONG CEILING STRUCTURE.
B. ALL CABLES ROUTED EXPOSED IN CEILING JOIST SHALL BE RUN PERPENDICULAR AND PARALLEL TO THE CEILING JOIST.
C. GENERAL CONTRACTOR SHALL BE RESPONSIBLE FOR DETERMINING IF CABLES SHALL BE PLENUM RATED TO MEET CODES.

KEYED NOTES:

(A) ELECTRICAL CONTRACTOR SHALL PROVIDE AND INSTALL AN EDWARDS 55-405 DOOR BELL AND AN EDWARDS 592 TRANSFORMER AT TWO LOCATIONS SHOWN. ELECTRICAL CONTRACTOR SHALL PROVIDE AND INSTALL AN EDWARDS 250 PUSHBUTTON TO CONTROL BOTH DOOR BELLS. PUSHBUTTON SHALL BE INSTALLED IN A WEATHERPROOF ENCLOSURE. TEST TO ASSURE WORKING SYSTEM. MOUNT TRANSFORMER & BELL AT 14'-0" AFF.

(B) EDWARDS 55-405 DOOR BELL @ CASH REGISTER & CONNECT TO SYSTEM AS NECESSARY. COORDINATE WITH G.C. FOR EXACT LOCATION OF BELL.

PUBLIC ADDRESS SYSTEM LEGEND

(S) OPEN BARJOIST MOUNTED SPEAKER

(S) CEILING BARJOIST MOUNTED SPEAKER

(J) PUBLIC ADDRESS SYSTEM JUNCTION BOX

(J) WP EXTERIOR WEATHERPROOF PUBLIC ADDRESS SYSTEM JUNCTION BOX.

LOW VOLTAGE WIRING SYSTEM LEGEND

PUBLIC ADDRESS (PA) SYSTEM WIRING
DATA/TELEPHONE SYSTEM WIRING
EMS SYSTEM WIRING
EMS SYSTEM WIRING
DOOR BELL SYSTEM WIRING

GENERAL NOTES:

(B) ALL CONDUITS INSTALLED IN THE STOCKROOM AREA SHALL BE INSTALLED AS TIGHT TO ROOF DECK AS ALLOWED BY CODE.

DATA SYSTEM:

GENERAL NOTES:

A. TSC SHALL FURNISH & INSTALL ALL POS, PA & PHONE SYSTEMS. GENERAL CONTRACTOR SHALL BE RESPONSIBLE FOR FURNISHING AND INSTALLING ALL BACKBOXES AND CONDUITS. LVW VENDOR RESPONSIBLE FOR WIRING.
B. LVW VENDOR SHALL PROVIDE ALL DATA AND TELEPHONE WIRING WITH WHITE JACKETS. ALL PHONE AND DATA CABLE MUST BE CAT5E CERTIFIED, NO EXCEPTIONS.
C. ALL CABLES ROUTED EXPOSED IN CEILING JOIST SHALL BE RUN PERPENDICULAR AND PARALLEL TO THE CEILING JOIST.
D. LVW VENDOR SHALL BE RESPONSIBLE FOR DETERMINING IF CABLES SHALL BE PLENUM RATED TO MEET CODES.
E. ROUTE CAT5E CABLES TO IT ROOM TO CEILING SPACE ABOVE THE RED POWER RECEPTACLE (CIRCUIT B-24). REFERENCE DRAWING E2.0 FOR RECEPTACLE LOCATION. REFER TO KEYED NOTE '5' BELOW.

TELEPHONE CABLE- (T1) (T2)

1. PROVIDE STANDARD OUTLET BOXES AT ALL TELEPHONE LOCATIONS WITH 3/4" CONDUIT (WITH PULL WIRE) TO ACCESSIBLE CEILING AREA OR TO BAR JOIST.

DATA CABLE- (D1) (D2) (D3)

1. PROVIDE STANDARD OUTLET BOXES AT ALL DATA LOCATIONS WITH 3/4" INCH CONDUIT (WITH PULL WIRE) TO ACCESSIBLE CEILING AREA OR TO BAR JOIST.

KEYED NOTES:

1. LVW VENDOR SHALL ROUTE TWO CAT5E CABLES FROM REGISTER TO THE IT ROOM. PROVIDE 20 FEET OF CABLE AT BOTH ENDS AT THE CEILING. COIL 15 FEET OF CABLE AT EACH END AND SUSPEND AT 10 FEET AFF. PROVIDE AS REQUIRED FOR EACH ADDITIONAL REGISTER. PROVIDE LABELS FOR EACH CABLE ON BOTH ENDS. LABEL CABLES 'REG1A' AND 'REG1B' FOR REGISTER ONE AND 'REG2A' AND 'REG2B' FOR REGISTER 2. LABEL ADDITIONAL REGISTER CABLES 'REG3A' AND 'REG3B', ETC. AS REQUIRED FOR ADDITIONAL REGISTERS.
2. NOTE NOT USED.
3. LVW VENDOR SHALL ROUTE FOUR CAT5E CABLES FROM SERVICE DESK TO THE IT ROOM. PROVIDE 20 FEET OF CABLE AT BOTH ENDS AT THE CEILING. COIL 15 FEET OF CABLE AT EACH END AND SUSPEND AT 10 FEET AFF. PROVIDE LABELS FOR EACH CABLE ON BOTH ENDS. LABEL CABLES 'SDA', 'SDB', 'SDC', 'SDD'.
4. NOTE NOT USED.
5. LVW VENDOR SHALL ROUTE CAT5E CABLES TO IT ROOM TO CEILING SPACE ABOVE THE RED POWER RECEPTACLE (CIRCUIT B-24). REFERENCE DRAWING E2.0 FOR RECEPTACLE LOCATION. REFER TO GENERAL NOTE 'E' ABOVE.
6. LVW VENDOR SHALL ROUTE THREE CAT5E CABLES FROM RECEIVING DESK TO THE IT ROOM. PROVIDE 20 FEET OF CABLE AT BOTH ENDS AT THE CEILING. COIL 15 FEET OF CABLE AT EACH END AND SUSPEND AT 10 FEET AFF. PROVIDE LABELS FOR EACH CABLE ON BOTH ENDS. LABEL CABLES 'RDA', 'RDB', 'RDC'.
7. NOTE NOT USED.
8. LVW VENDOR SHALL ROUTE THREE CAT5E CABLES FROM IT ROOM ABOVE THE RED POWER RECEPTACLE (CIRCUIT B-24) TO THE TELEPHONE BOARD. PROVIDE 20 FEET OF CABLE AT BOTH ENDS AT THE CEILING. COIL 15 FEET OF CABLE AT EACH END AND SUSPEND AT 10 FEET AFF. PROVIDE AS REQUIRED FOR EACH ADDITIONAL REGISTER. PROVIDE LABELS FOR EACH CABLE ON BOTH ENDS. LABEL CABLES 'DSL', 'T1A' AND 'T1B'.
9. LVW VENDOR SHALL ROUTE THREE CAT5E CABLES FROM THE IT ROOM AT THE DATA WALL OUTLET TO THE TELEPHONE BOARD. PROVIDE 20 FEET OF CABLE AT BOTH ENDS AT THE CEILING. COIL 15 FEET OF CABLE AT EACH END AND SUSPEND AT 10 FEET AFF. PROVIDE LABELS FOR EACH CABLE ON BOTH ENDS. LABEL CABLES 'DIAL TONE', 'FAX', AND 'MUSIC ON HOLD'.
10. LVW VENDOR SHALL ROUTE TWO CAT5E CABLES FROM THE BREAKROOM AT THE CEILING ABOVE THE POWER OUTLET TO THE IT ROOM ABOVE THE RED POWER RECEPTACLE. PROVIDE 20 FEET OF CABLE AT BOTH ENDS AT THE CEILING. COIL 15 FEET OF CABLE AT EACH END AND SUSPEND AT 10 FEET AFF. PROVIDE LABELS FOR EACH CABLE ON BOTH ENDS. LABEL CABLES 'LRA' AND 'LRB'.
11. LVW SHALL ROUTE SIX CAT5E DATA CABLES (TWO PER ACCESS POINT) BACK TO IT ROOM. SEE ACCESS POINT SITE SPECIFIC MAP PROVIDED BY TSC FOR EXACT LOCATION OF EACH ACCESS POINT.
12. NOTE NOT USED.
13. LVW VENDOR SHALL ROUTE CAT5E CABLE FROM MAIN ENTRANCE TO THE IT CLOSET. PROVIDE 20 FEET OF CABLE AT BOTH ENDS AT THE CEILING. COIL 15 FEET OF CABLE AT EACH END AND SUSPEND AT 10 FEET AFF. PROVIDE LABEL AT BOTH ENDS. LABEL CAM1.
14. LVW VENDOR SHALL ROUTE CAT5E CABLE FROM REAR OF REGISTER BAYS TO THE IT CLOSET. PROVIDE 20 FEET OF CABLE AT BOTH ENDS AT THE CEILING. COIL 15 FEET OF CABLE AT EACH END AND SUSPEND AT 10 FEET AFF. PROVIDE LABEL AT BOTH ENDS. LABEL CAM2.
15. LVW VENDOR SHALL ROUTE CAT5E CABLE FROM POD AREA CENTERED ON TOOLS TO THE IT CLOSET. PROVIDE 20 FEET OF CABLE AT BOTH ENDS AT THE CEILING. COIL 15 FEET OF CABLE AT EACH END AND SUSPEND AT 10 FEET AFF. PROVIDE LABEL AT BOTH ENDS. LABEL CAM3.
16. LVW VENDOR SHALL ROUTE CAT5E CABLE FROM MANAGERS OFFICE TO THE IT CLOSET. PROVIDE 20 FEET OF CABLE AT BOTH ENDS AT THE CEILING. COIL 15 FEET OF CABLE AT EACH END AND SUSPEND AT 10 FEET AFF. PROVIDE LABEL AT BOTH ENDS. LABEL CAM4.
17. LVW VENDOR SHALL ROUTE CAT5E CABLE FROM IT CLOSET TO THE IT CLOSET. PROVIDE 20 FEET OF CABLE AT BOTH ENDS AT THE CEILING. COIL 15 FEETOF CABLE AT EACH END AND SUSPEND AT 10 FEET AFF. PROVIDE LABEL AT BOTH ENDS. LABEL CAM5.
18. LVW VENDOR SHALL ROUTE CAT5E CABLE FROM RECEIVING AREA TO THE IT CLOSET. PROVIDE 20 FEET OF CABLE AT BOTH ENDS AT THE CEILING. COIL 15 FEET OF CABLE AT EACH END AND SUSPEND AT 10 FEET AFF. PROVIDE LABEL AT BOTH ENDS. LABEL CAM6.
19. LVW VENDOR SHALL ROUTE CAT5E CABLE FROM THE 90 DEGREE CORNER OF BOOTS TO THE IT CLOSET. PROVIDE 20 FEET OF CABLE AT BOTH ENDS AT THE CEILING. COIL 15 FEET OF CABLE AT EACH END AND SUSPEND AT 10 FEET AFF. PROVIDE LABEL AT BOTH ENDS. LABEL CAM8.
20. LVW VENDOR SHALL ROUTE 16/2 CABLE FOR PUBLIC VIEW MONITOR FROM THE 90 DEGREE CORNER OF BOOTS TO THE IT CLOSET. PROVIDE 20 FEET OF CABLE AT BOTH ENDS AT THE CEILING. COIL 15 FEET OF CABLE AT EACH END AND SUSPEND AT 10 FEET AFF. PROVIDE LABEL AT BOTH ENDS. LABEL PVM1.
21. LVW VENDOR SHALL ROUTE CAT5E CABLE FROM AREA BETWEEN SIDE LOT ENTRANCE AND FRONT OF BUILDING TO THE IT CLOSET. PROVIDE 20 FEET OF CABLE AT BOTH ENDS AT THE CEILING. COIL 15 FEET OF CABLE AT EACH END AND SUSPEND AT 10 FEET AFF. PROVIDE LABEL AT BOTH ENDS. LABEL CAM9.
22. LVW VENDOR SHALL ROUTE CAT5E CABLE FROM SIDE OF VESTIBULE THAT WILL DISPLAY POWER EQUIPMENT TO THE IT CLOSET. VERIFY LOCATION ON SITE. PROVIDE 20 FEET OF CABLE AT BOTH ENDS AT THE CEILING. COIL 15 FEET OF CABLE AT EACH END AND SUSPEND AT 10 FEET AFF. PROVIDE LABEL AT BOTH ENDS. LABEL CAM10.
23. LVW VENDOR SHALL ROUTE CAT5E CABLE FOR EAS FROM ENTRANCE TO THE IT CLOSET. PROVIDE 20 FEET OF CABLE AT BOTH ENDS AT THE CEILING. COIL 15 FEET OF CABLE AT EACH END AND SUSPEND AT 10 FEET AFF. PROVIDE LABEL AT BOTH ENDS. LABEL EAS1.
24. LVW VENDOR SHALL ROUTE CAT5E CABLE FOR EAS FROM SIDE LOT ENTRANCE TO THE IT CLOSET. PROVIDE 20 FEET OF CABLE AT BOTH ENDS AT THE CEILING. COIL 15 FEET OF CABLE AT EACH END AND SUSPEND AT 10 FEET AFF. PROVIDE LABEL AT BOTH ENDS. LABEL EAS2.
25. LVW VENDOR SHALL ROUTE CAT5E CABLE FOR EAS FROM LIVE GOODS CENTER ENTRANCE TO THE IT CLOSET. PROVIDE 20 FEET OF CABLE AT BOTH ENDS AT THE CEILING. COIL 15 FEET OF CABLE AT EACH END AND SUSPEND AT 10 FEET AFF. PROVIDE LABEL AT BOTH ENDS. LABEL EAS3.

KEYED NOTES:

1. ALL ROOFTOP EQUIPMENT CONNECTIONS SHALL BE MADE THROUGH THE UNIT ROOF CURB. ROOF PENETRATIONS ARE NOT ACCEPTABLE.
2. FIRE ALARM CONTROL PANEL TO BE MOUNTED ON TELEPHONE BOARD. REFERENCE DETAIL 1/E4.0. CONNECT TO DEDICATED 120 VOLT POWER CIRCUIT.
3. TO HVAC/FAN CONTROLLER FOR SHUTDOWN OF UNIT UPON ACTIVATION OF GENERAL ALARM. CONTROLLER TO BE FURNISHED BY CONTRACTOR. RELAY MODULE TO BE LOCATED WITHIN THREE FEET OF CONTROLLER.

LVW RESPONSIBILITY AND TIMING PLAN

LATEST – Q1 2024

PROTOTYPES

ACTION	BY WHO	WHEN	SPECIAL NOTES
STORE ADDED TO SOS	TSC REAL ESTATE	1ST MONDAY OF EACH MONTH	
CODES AND BUILDING TYPE (CONTACT TSC PM AS NECESSARY) RESEARCHED, BA AND FA PLANS COMPLETED	JCI/ADT	WITHIN 30 DAYS AFTER ADDED TO THE SOS	PLEASE BE SURE TO VERIFY HVAC SYSTEMS (GROUND MOUNT VS. ROOF MOUNT, ETC...) SECURITY SYSTEMS CONTRACTOR TO IDENTIFY EXIST. HVAC UNITS BY LL PER THE CHECKLIST
SECURITY SYSTEMS CONTRACTOR COMPLETES PLANS SENDS TO RICH WOOD AND TSC PM	JCI/ADT	ON 30TH DAY AFTER ADDED TO SOS	
PLANS FORWARDED TO LL AND/OR HIS ARCHITECT IF KNOWN	TSC PM	31 DAYS	
TSC TO REVIEW LL PLANS FOR ACCURACY	TSC PM	WHEN SENT BY LL PRIOR TO CONSTRUCTION START	
LL TO COMPLETE ALL LVW SOW PER PLANS USING TSC VENDOR	MERCURY TECH	NO LESS THAN 2 WEEKS PRIOR TO FD FROM 2 WEEKS	
SECURITY SYSTEMS CONTRACTOR TO INSTALL THEIR EQUIPMENT AND MAKE TERMINATIONS	JCI/ADT	STARTING APPROXIMATELY 3 WEEKS FROM FD TO BE DONE LAST AS LVW VENDOR COMPLETES NO LATER THAN 2 WEEKS PRIOR TO FD.	
INSTALLATION OF PA SYSTEM, PHONE SYSTEM, SPEAKERS, OUTSIDE HORNS, PHONES, PATCH PANEL, AP'S W/ ANTENNAS	STAN KOLIC / MERCURY TECH	MONDAY AND TUESDAY BEFORE FD	
INSTALLATION OF POS SYSTEMS AT ALL LOCATIONS AND TESTING OF AP SYSTEM	STAN KOLIC / AGILYSIS	TUESDAY BEFORE FD	

ON DEVELOPER OWNED PROJECTS, DEVELOPER IS RESPONSIBLE FOR 100 % OF COST OF LVW VENDOR AND WIRING.

PRELIMINARY
NOT FOR CONSTRUCTION

OXFORD ARCHITECTURE
2934 Sidco Drive
Suite 120
Nashville, TN 37204
Architecture
Planning
Interior Architecture

PARSONS ENGINEERING, INC.
NASHVILLE, TENNESSEE
PARSONSENGINEERING.COM

TRACTOR SUPPLY COMPANY
BOUTTE
LOUISIANA

This drawing and the design shown is the property of the architect. The reproduction, copying or use of this drawing without their written consent is prohibited and any infringement will be subject to legal action

Job Number: 2428
Date: 07.23.2024
Revisions:
Revisions:
Revisions:

SYSTEMS FLOOR NOTES

Sheet Number: E5.1

Project: 24159 Drawing: 24159-E5.1.dwg

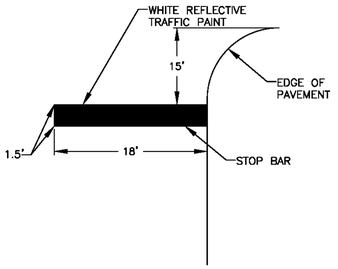

1 TYPICAL PAVEMENT MARKINGS
C3 | C6 NOT TO SCALE

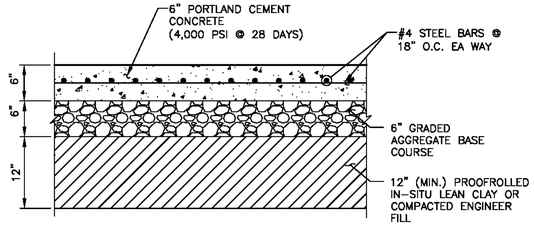

CRUSHED AGGREGATE BASE SHOULD BE COMPACTED IN MAXIMUM LIFTS OF EIGHT INCHES OF LOOSE MATERIAL TO A MINIMUM OF 95% OF THE STANDARD PROCTOR (ASTM D698) MAXIMUM DRY DENSITY. AGGREGATE SHOULD CONFORM TO THE LATEST EDITION OF THE LADOTD SPECIFICATIONS.

2A 6" STANDARD DUTY P.C.C.P. SECTION
C3 | C6 NOT TO SCALE

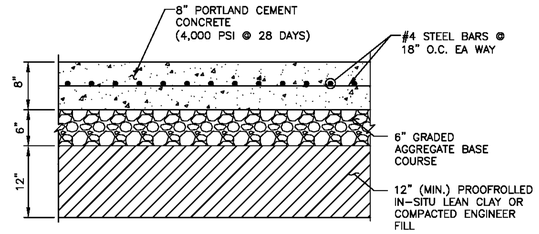

CRUSHED AGGREGATE BASE SHOULD BE COMPACTED IN MAXIMUM LIFTS OF EIGHT INCHES OF LOOSE MATERIAL TO A MINIMUM OF 95% OF THE STANDARD PROCTOR (ASTM D698) MAXIMUM DRY DENSITY. AGGREGATE SHOULD CONFORM TO THE LATEST EDITION OF THE LADOTD SPECIFICATIONS.

2B 8" HEAVY DUTY P.C.C.P. SECTION
C3 | C6 NOT TO SCALE

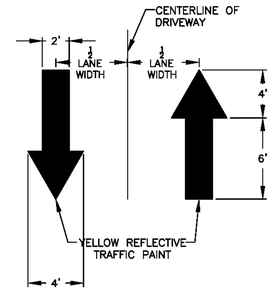

3 DRIVEWAY TRAFFIC FLOW DIRECTIONAL ARROW DETAIL
C3 | C6 NOT TO SCALE

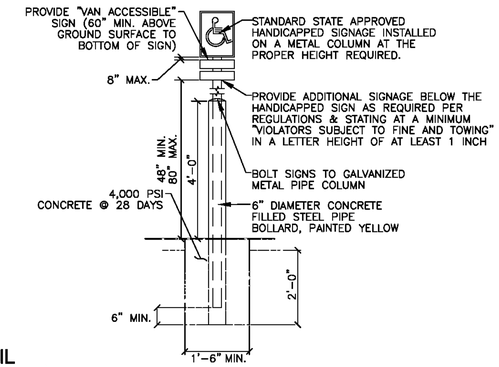

4 HANDICAP PARKING SIGN DETAIL
C3 | C6 NOT TO SCALE

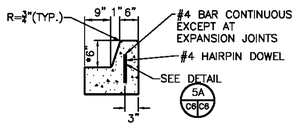

(AT ASPHALT)

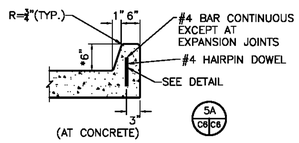

(AT CONCRETE)

5 6" CONCRETE BARRIER CURB & GUTTER AND BARRIER CURB
C3 | C6 SCALE: N.T.S.

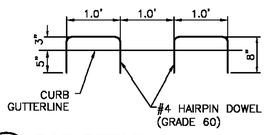

5A BAR DETAIL
C6 | C6 SCALE: N.T.S.

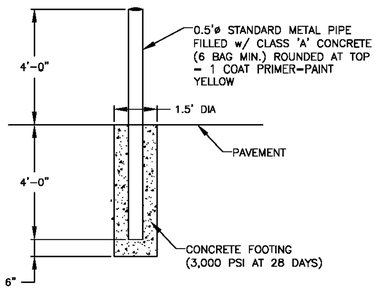

NOTE:

BOLLARDS TO BE INSTALLED AT CORNERS OF FOD AND/OR BUILDING AT DRIVE AISLE FOR TRUCK PARTH AND WITHIN FOD AT OUTSIDE CORNER OF DRIVE THRU CANOPY, OUTSIDE OF GARDEN CENTER, AND REAR GATE OPERATOR.

8 PIPE BOLLARD
C3 | C6 NOT TO SCALE

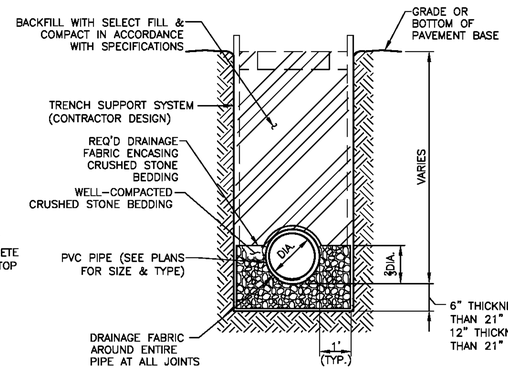

6 TYPICAL SANITARY SEWER PVC PIPE TRENCH DETAIL
C5 | C6 NOT TO SCALE

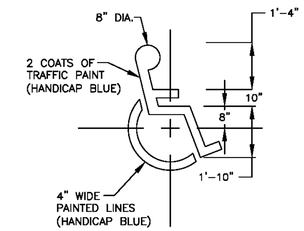

10 HANDICAP SYMBOL
C3 | C6 NOT TO SCALE

CHAIN LINK FENCE SPECIFICATIONS FOR FRONT OF LIVE GOODS CENTER ONLY:

1. FABRIC: 96' 9 GA. GALVANIZED (2" MESH) CHAIN LINK FABRIC.
2. TOP & BOTTOM RAIL: 1 5/8' O.D. FULL WEIGHT PIPE, 2.27 LBS. PER FOOT (MIN). TOP RAIL TO BE JOINED WITH 1 5/8' SLEEVE. BOTTOM RAIL @ 18' ABV. GRADE.
3. LINE POST: 2 1/2' O.D. FULL WEIGHT PIPE, 3.65 LBS. PER FOOT (MIN). LINE POST TO BE SET 10' ON CENTER MAX. SPACING. CONCRETE FOOTING TO BE 8' DIA. BY 30' DEEP CONC.
4. TERMINAL POST: 3' O.D. FULL WEIGHT PIPE, 5.79 LBS. PER FOOT (MIN). SET IN 8' DIA. BY 36' DEEP CONC. FOOTING.
5. GATE POST: 4' O.D. FULL WEIGHT PIPE, 9.10 LBS. PER FOOT (MIN). 8' DIA. 36' DEEP CONC. FOOTING.
6. (3) GATES: (1) 20 FOOT MANUAL CANTILEVERED CHAIN LINK GATE, (1) 20 FOOT CANTILEVERED CHAIN LINK GATE WITH AUTOMATIC GATE OPERATOR, AND (1) 4 FOOT SWING GATE, WITH FRAMEWORK OF 1 5/8' FULL WEIGHT PIPE, 2.27 LBS. PER FOOT (MIN). GATES BRACED AND TRUSSED AS NECESSARY. SAME FABRIC AS FENCE. SEE PLAN FOR WIDTH.

6A. SWING GATES: DESIGN AS PER THE MANUFACTURERS DESIGN STANDARDS. GATES SHALL BE MANUALLY OPERATED.

7. TENSION WIRE: 7 GA. COIL SPRING GALVANIZED TENSION WIRE ATTACHED TO BOTTOM OF FENCE FABRIC WITH 9 GA. ALUM. HOG RING SPACED 24' ON CENTER.
8. FITTINGS: HEAVY BRACED BAND AND CARRIAGE BOLT, PRESSED STEEL RAIL-END, PRESSED STEEL LOOP CAP, PRESSED STEEL CAP, 1/4' X 3/4' TENSION BAR, HEAVY TENSION BAND AND CARRIAGE BOLT.
9. TIE WIRE: 8 1/4' 12 GA. STEEL TIE WIRE AND 6 1/2' 12 GA. STEEL WIRE SPACED 15' ON CENTER FOR LINE POST AND 24' ON CENTER FOR RAILS.
10. POST FOOTING: TRUCK POURED CONCRETE.
11. SPECIFY A GATE LATCH WITH THE ABILITY TO ACCEPT A STANDARD PAD LOCK.

NOTE: CONTRACTOR TO SUBMIT 16' FENCE SHOP DRAWINGS TO ARCHITECT FOR APPROVAL. FENCE SUPPLIER TO VERIFY ON SITE CONDITIONS.

7 CHAIN LINK FENCE SPECIFICATIONS
C3 | C6 NOT TO SCALE

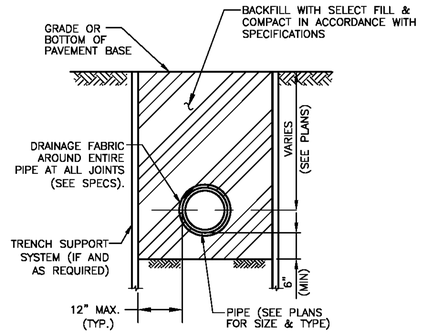

9 TYPICAL WATER PVC PIPE TRENCH DETAIL
C5 | C6 NOT TO SCALE

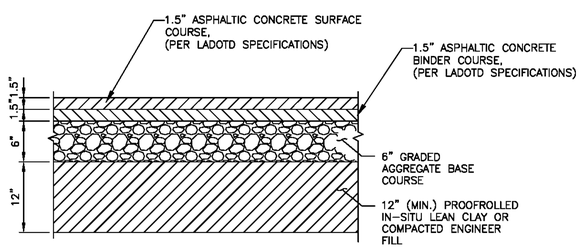

AGGREGATE BASE SHOULD BE COMPACTED IN MAXIMUM LIFTS OF EIGHT INCHES OF LOOSE MATERIAL TO A MINIMUM OF 95% OF THE STANDARD PROCTOR (ASTM D698) MAXIMUM DRY DENSITY. AGGREGATE SHOULD CONFORM TO THE LATEST EDITION OF THE LADOTD SPECIFICATIONS.

12 DETAIL OF 3" ASPHALT PAVING
C3 | C6 NOT TO SCALE

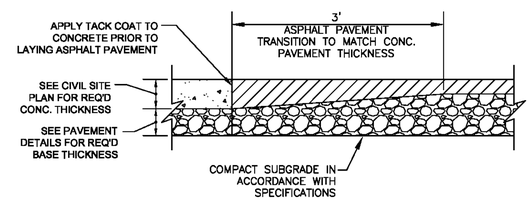

14 CONCRETE TO ASPHALT PAVEMENT TRANSITION
C3 | C6 NOT TO SCALE

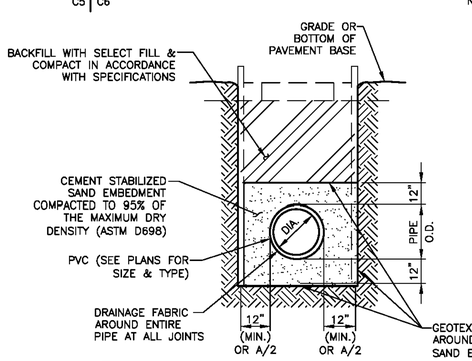

NOTES:

1. THIS DETAIL MAY BE USED ONLY FOR DRY STABLE TRENCH CONDITIONS.
2. MINIMUM TRENCH WIDTH SHALL BE PIPE OUTSIDE DIAMETER PLUS AN ALLOWANCE "A." FOR THE NOMINAL PIPE SIZE:

NOMINAL PIPE SIZE	"A"
UP TO 30"	24"
OVER 30"	36"

3. MAX TRENCH WIDTH SHALL BE NOT GREATER THAN MINIMUM TRENCH PLUS 24 INCHES, UNLESS OTHERWISE NOTED.

11 TYPICAL PVC PIPE TRENCH DETAIL
C5 | C6 NOT TO SCALE

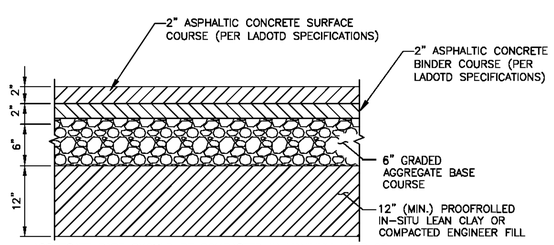

AGGREGATE BASE SHOULD BE COMPACTED IN MAXIMUM LIFTS OF EIGHT INCHES OF LOOSE MATERIAL TO A MINIMUM OF 95% OF THE STANDARD PROCTOR (ASTM D698) MAXIMUM DRY DENSITY. AGGREGATE SHOULD CONFORM TO THE LATEST EDITION OF THE LADOTD SPECIFICATIONS.

13 DETAIL OF 4" ASPHALT PAVING
C3 | C6 NOT TO SCALE

SEE LADOTD DETAIL PC-01

- THE TOP 18" OF ALL INLETS & MANHOLES SHALL BE VERTICALLY ADJUSTABLE
- INLET INSIDE DIMENSION FROM WALL TO WALL SHALL BE NO LESS THAN 48" WIDE
- INLET & MANHOLE WALLS SHALL BE NO LESS THAN 6" THICK
- DROP INLETS & MANHOLES SHALL BE PLACED ON A 6" MIN. LIMESTONE PAD EXTENDING 2' BEYOND FOOTPRINT ON ALL SIDES.

15 DETAIL OF DROP INLET AND MANHOLE
C3 | C6 NOT TO SCALE

DEVELOPER:
MAINLAND RETAIL LLC
1905 ACKLEN AVE.
NASHVILLE, TN 37212
TEL: (615) 457-3005

TSC TRACTOR SUPPLY CO

9475 E PARK AVE. (LA 659)
HOUMA (TERREBONNE PARISH), LA

LINFIELD, HUNTER & JUNIUS, INC.
PROFESSIONAL ENGINEERS, ARCHITECTS AND SURVEYORS
3608 18th Street, Suite 200
Metairie, Louisiana 70002
PHONE: (504) 833-5300
FAX: (504) 833-5350

© 2019 by Linfield, Hunter & Junius, Inc.

SEAL
STATE OF LOUISIANA
CASEY M. GENOVESE
License No. 35327
PROFESSIONAL ENGINEER IN CIVIL ENGINEERING
01/20/25

REV. NO.	DATE

TRACTOR SUPPLY - 9475 E PARK AVE. (LA 659)
HOUMA, LOUISIANA

THIS SHEET: CONSTRUCTION DETAILS

PROJ. NO. 23-078
DATE 01/20/25

C-6

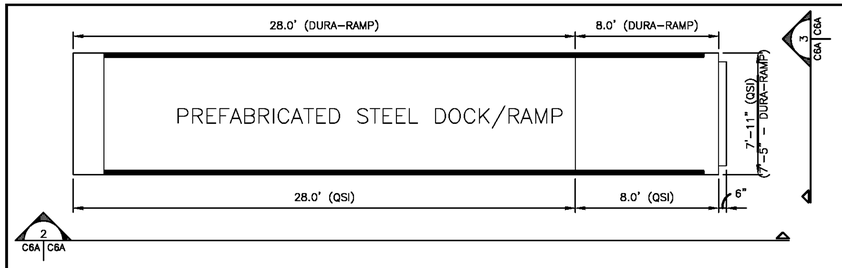

1 STEEL DOCK/RAMP
C3 C6A SCALE: N.T.S.

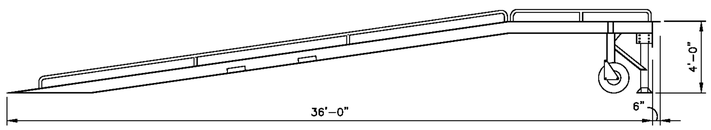

2 STEEL DOCK/RAMP
C3 C6A SCALE: N.T.S.

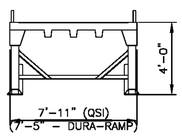

3 STEEL DOCK/RAMP
C3 C6A SCALE: N.T.S.

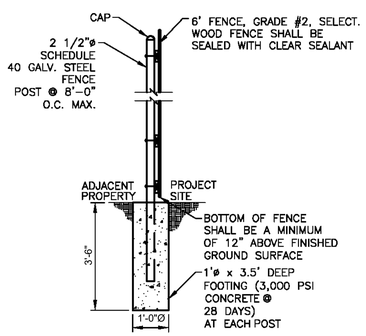

4 6' TALL WOOD FENCE DETAIL
C3 C6A NOT TO SCALE

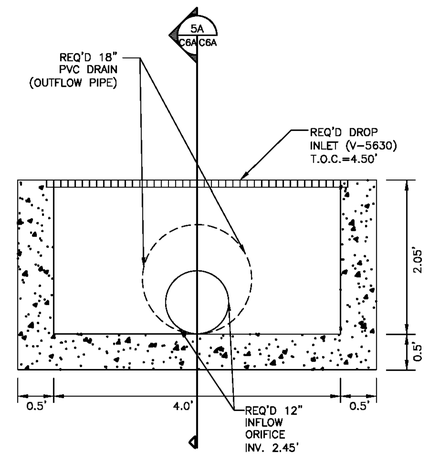

5 STORMWATER OUTFALL CONTROL STRUCTURE
C3,C4 C6A NOT TO SCALE

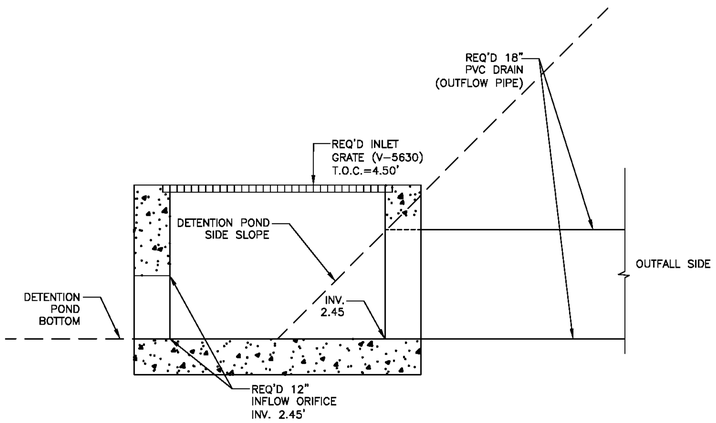

5A STORMWATER OUTFALL CONTROL STRUCTURE SECTION
C3,C4 C6A NOT TO SCALE

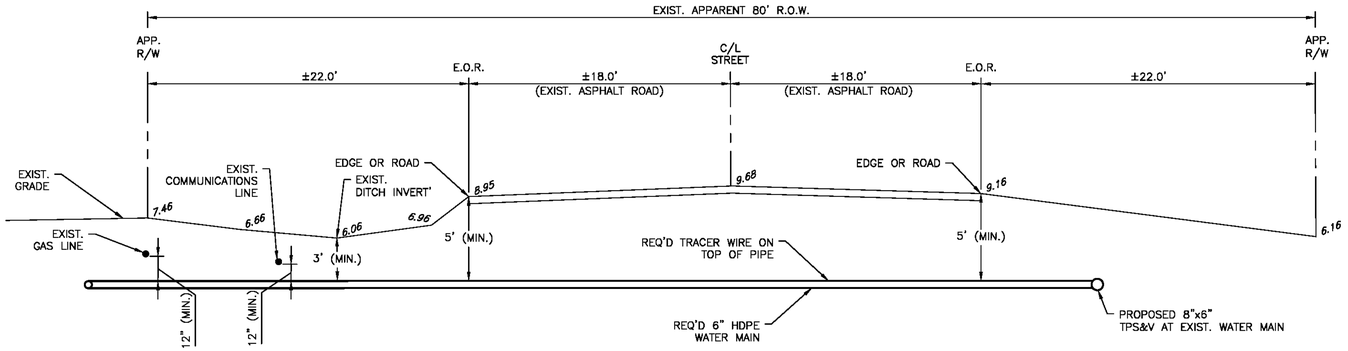

14 WATERLINE ROAD CROSSING
C5 C6A SCALE: N.T.S.

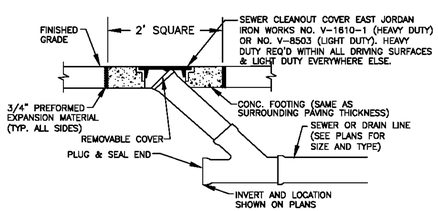

6 CLEANOUT DETAIL
C5 C6A SCALE: N.T.S.

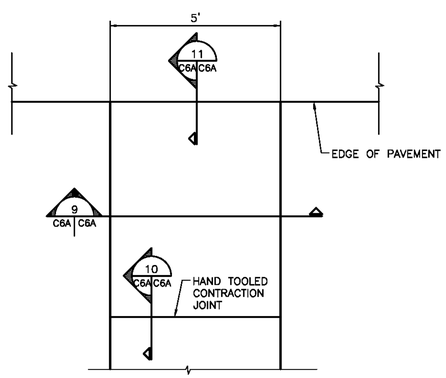

8 CONCRETE DRAINAGE CHANNEL
C3 C6A SCALE: N.T.S.

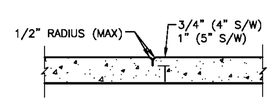

10 HAND TOOLED CONTRACTION JOINT
C6A C6A (MAXIMUM SPACING 4'-0") SCALE: N.T.S.

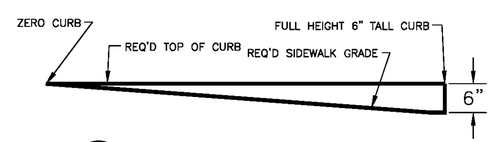

12 CURB TAPER DETAIL
C3 C6A NOT TO SCALE

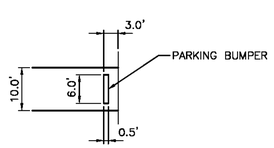

7 PARKING BUMPER DETAIL
C3 C6A SCALE: N.T.S.

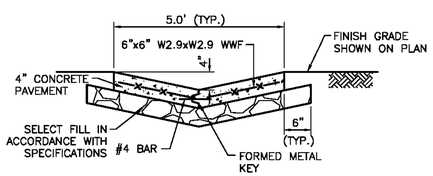

9 SECTION
C6A C6A SCALE: N.T.S

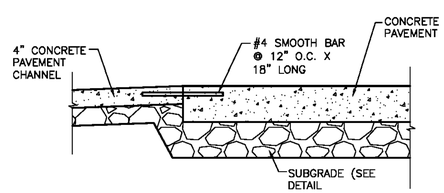

11 SECTION
C6A C6A SCALE: N.T.S.

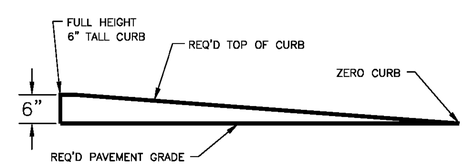

13 CURB TAPER DETAIL
C3 C6A NOT TO SCALE

DEVELOPER:
MAINLAND RETAIL LLC
1905 ACKLEN AVE.
NASHVILLE, TN 37212
TEL: (615) 457-3005

TSC TRACTOR SUPPLY Co

9475 E PARK AVE. (LA 659)
HOUMA (TERREBONNE PARISH), LA

LINFIELD, HUNTER & JUNIUS, INC.
PROFESSIONAL ENGINEERS, ARCHITECTS AND SURVEYORS
3608 18th Street, Suite 200
Metairie, Louisiana 70002
PH/FONTE: (504) 833-5300
FAX: (504) 833-5350

© 2025 by Linfield, Hunter & Junius, Inc.

SEAL
STATE OF LOUISIANA
CASEY M. GENOVESE
License No. 35327
PROFESSIONAL ENGINEER IN CIVIL ENGINEERING
04/23/25

REV. NO.	DATE
1	03/21/25
2	04/23/25

TRACTOR SUPPLY - 9475 E PARK AVE. (LA 659)
HOUMA, LOUISIANA

THIS SHEET: CONSTRUCTION DETAILS

PROJ. NO. 23-078
DATE 01/20/25

C-6A

LEGEND

- EXIST. PROPERTY LINE
- EXIST. UG SEWER LINE
- EXIST. UG TELECOMMUNICATIONS LINE
- EXIST. UG WATER LINE
- EXIST. UG GAS LINE
- EXIST. OVERHEAD ELECTRIC LINE
- (SIZE/TYPE) EXIST. DRAIN LINE
- EXIST. OVERHANG/CANOPY
- EXIST. CHAIN LINK FENCE
- EXIST. WOODEN FENCE
- EXIST. BUILDING
- FLOOD ZONE BOUNDARY
- TEL PED EXIST. TELECOMMUNICATIONS PEDESTAL
- E EXIST. ELECTRICAL BOX
- EXIST. DROP INLET
- EXIST. SEWER MANHOLE
- EXIST. POWER POLE
- EXIST. GUY WIRE
- EXIST. SIGN
- EXIST. FIRE HYDRANT
- EXIST. WATER VALVE
- EXIST. TREE
- 5.85 SPOT ELEVATION
- FOUND 3/4" IRON ROD
- XFND FOUND CROSS-CUT
- EXIST. DITCH
- 5 EXIST. CONTOURS

NEW FEATURES

- REQ'D POWER POLE
- REQ'D RIPRAP
- REQ'D DROP INLET
- S REQ'D SEWER MANHOLE
- P.S.D.A. PERMANENT SIDEWALK DISPLAY AREA
- REQ'D CHAINLINK FENCE
- REQ'D WOODEN FENCE

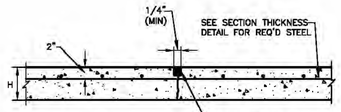

1 CRACK CONTROL JOINT (C.C.J)
C7 | C7 NOT TO SCALE

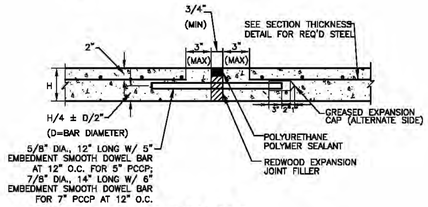

2 EXPANSION JOINT (E.J)
C7 | C7 NOT TO SCALE

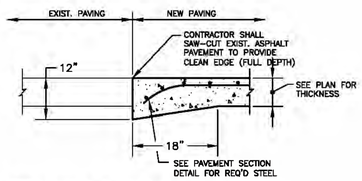

3 BUTT JOINT (B.J.)
C7 | C7 NOT TO SCALE

LEGEND

- C.C.J. CRACK CONTROL JOINT (SEE DETAIL 1, THIS DWG.)
- E.J. EXPANSION JOINT (SEE DETAIL 2, THIS DWG.)
- B.J. BUTT JOINT (SEE DETAIL 3, THIS DWG.)

PAVING LEGEND

- HEAVY DUTY ASPHALT
- HEAVY DUTY CONCRETE
- STANDARD DUTY ASPHALT
- STANDARD DUTY CONCRETE
- STRIPED ISLAND

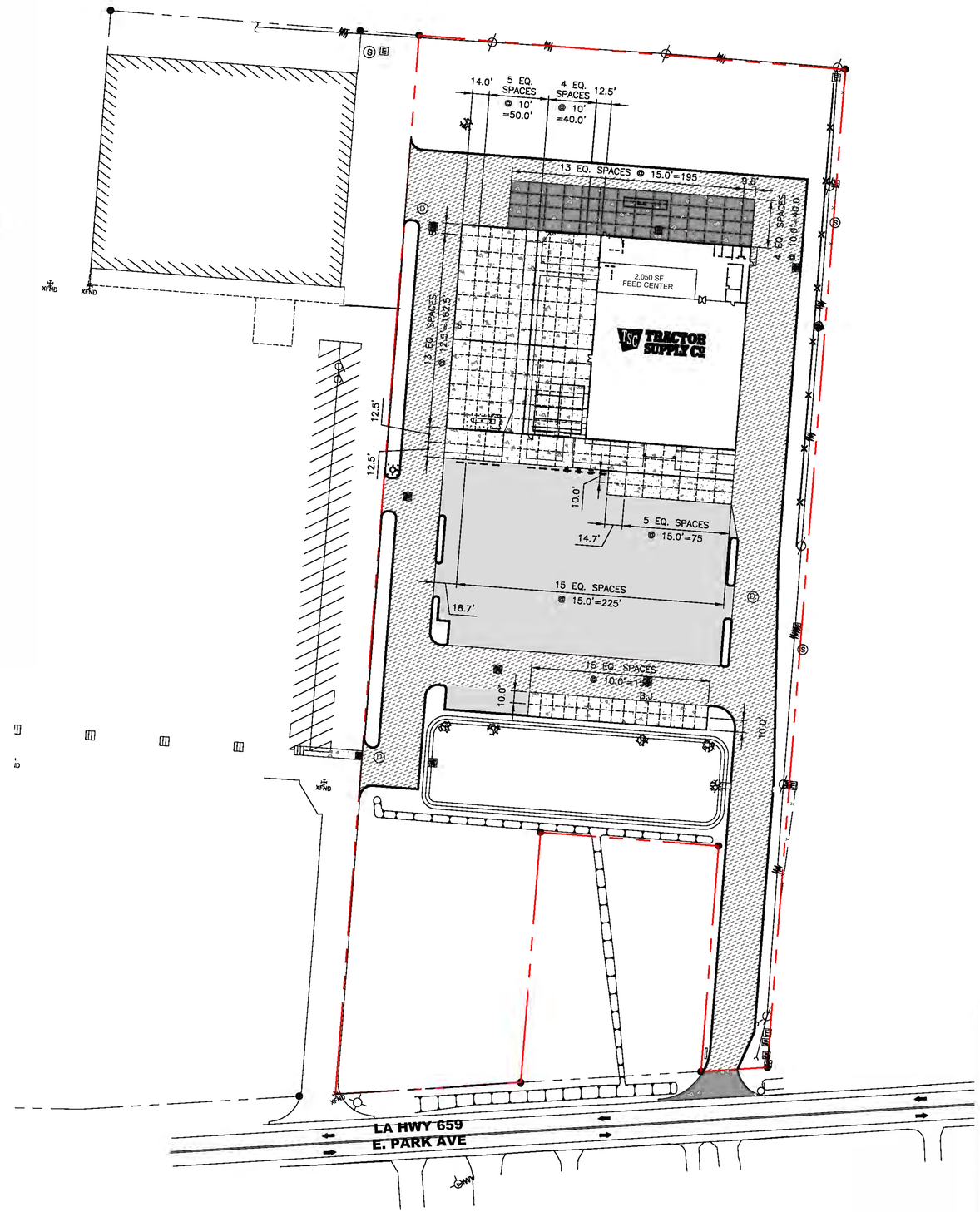

JOINT LAYOUT
24" x 36" SCALE: 1" = 50'

DEVELOPER:
MAINLAND RETAIL LLC
1905 ACKLEN AVE.
NASHVILLE, TN 37212
TEL: (615) 457-3005

TSC TRACTOR SUPPLY CO

9475 E PARK AVE. (LA 659)
HOUMA (TERREBONNE PARISH), LA

LINFIELD, HUNTER & JUNIUS, INC.
PROFESSIONAL ENGINEERS, ARCHITECTS AND SURVEYORS
3608 18th Street, Suite 200
Metairie, Louisiana 70002
PHONE (504) 833-5300
FAX (504) 833-5350

© 2025 by Linfield, Hunter & Junius, Inc.

SEAL: STATE OF LOUISIANA — CASEY M. GENOVESE — License No. 35327 — PROFESSIONAL ENGINEER IN CIVIL ENGINEERING — 04/23/25

REV. NO.	DATE
1	03/21/25
2	04/23/25

TRACTOR SUPPLY - 9475 E PARK AVE. (LA 659)
HOUMA, LOUISIANA

THIS SHEET: JOINT LAYOUT

PROJ. NO. 23-078
DATE 01/20/25

C-7

⌀ MINIMUM TRENCH CLEARANCE		
TYPE OF STRUCTURE	INSIDE DIAMETER	MIN. CLEARANCE
REINFORCED CONCRETE	ALL	18"
FLEXIBLE PIPE	<48"	18"
FLEXIBLE PIPE	≥48"	24"

⊗ MINIMUM BEDDING MATERIAL THICKNESS UNDER STRUCTURE IS 6 INCHES UNLESS OTHERWISE SHOWN ON PLANS OR AS DIRECTED BY THE PE.

△ NO BEDDING MATERIAL REQUIRED UNLESS OTHERWISE SPECIFIED ON THE PLANS OR AS DIRECTED BY THE PE.

⊛ REFER TO NOTE 3 ON SHEET 1 OF THIS SERIES.

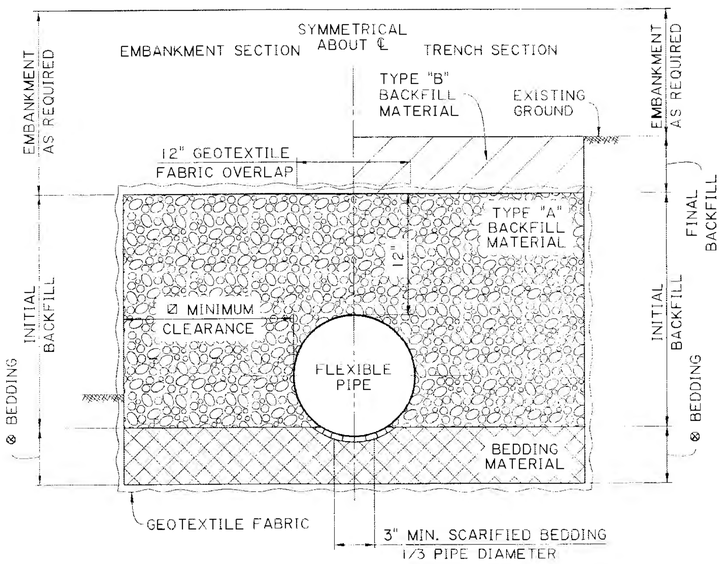

FLEXIBLE PIPE CROSS DRAIN

TRENCH AND EMBANKMENT INSTALLATIONS
SCALE: 1½"=1'-0"

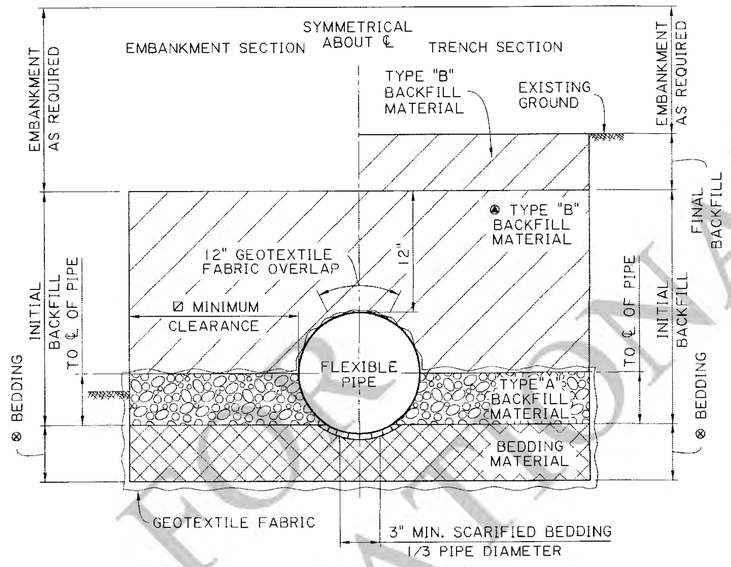

FLEXIBLE PIPE STORM DRAIN

TRENCH AND EMBANKMENT INSTALLATIONS
SCALE: 1½"=1'-0"

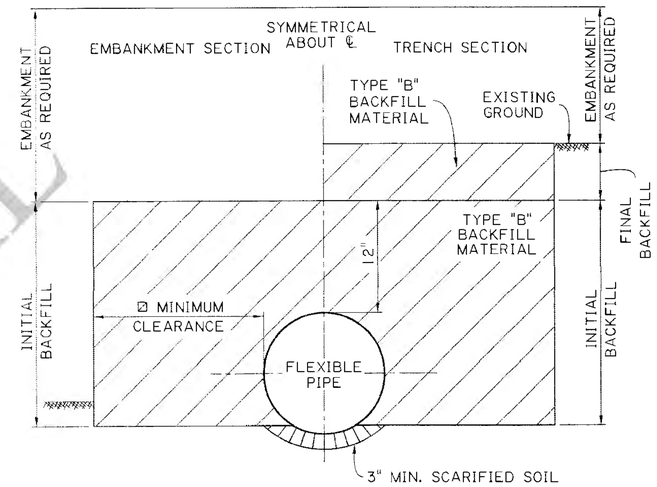

△ FLEXIBLE PIPE SIDE DRAIN

TRENCH AND EMBANKMENT INSTALLATIONS
SCALE: 1½"=1'-0"

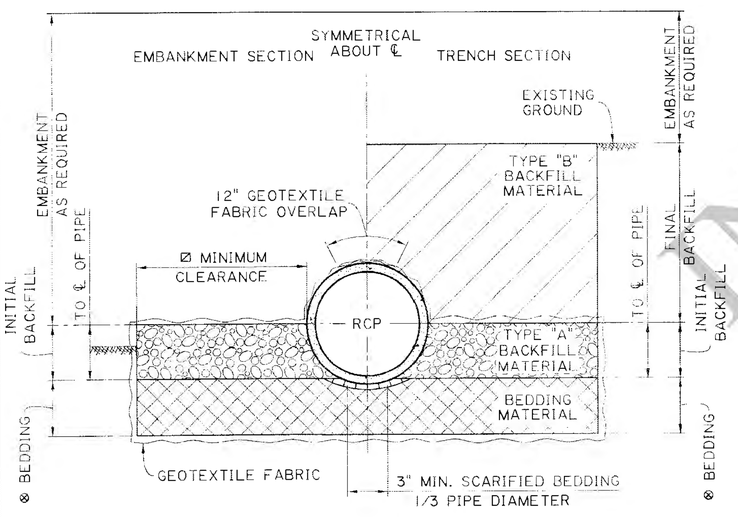

REINFORCED CONCRETE PIPE CROSS DRAIN

TRENCH AND EMBANKMENT INSTALLATIONS
SCALE: 1½"=1'-0"

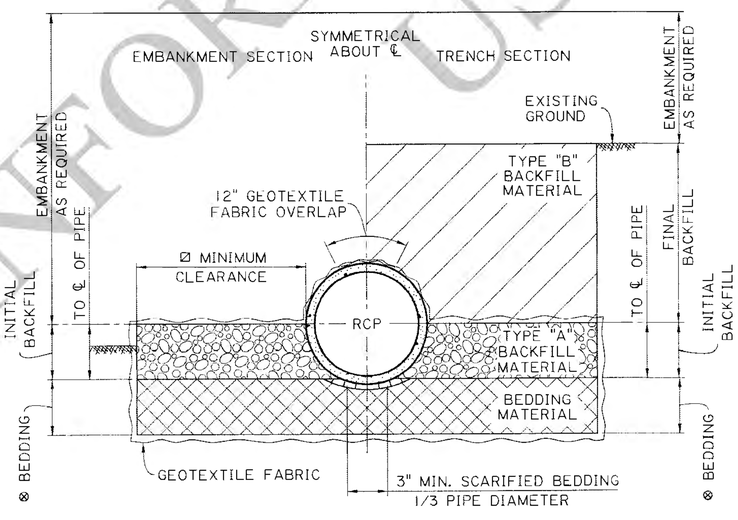

REINFORCED CONCRETE PIPE STORM DRAIN

TRENCH AND EMBANKMENT INSTALLATIONS
SCALE: 1½"=1'-0"

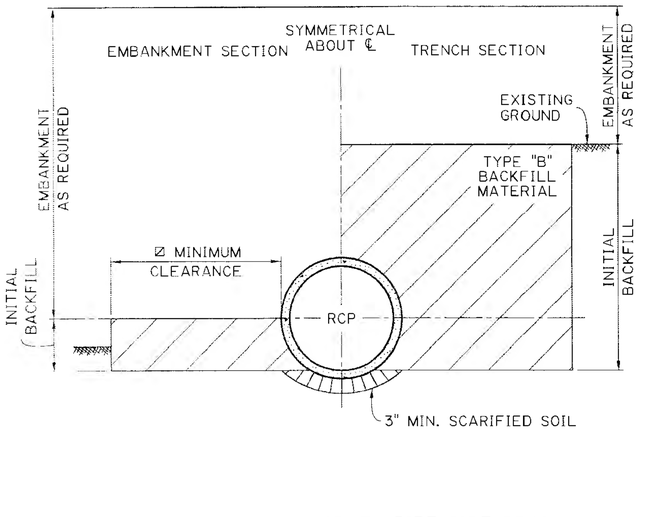

△ REINFORCED CONCRETE PIPE SIDE DRAIN

TRENCH AND EMBANKMENT INSTALLATIONS
SCALE: 1½"=1'-0"

FOR INFORMAL USE

09:18
10/23/2023

SHEET NUMBER

PARISH	CONTROL SECTION	STATE PROJECT

DESIGN C. NICKEL
CHECK J. RAUSER
DETAIL L. HASTINGS
CHECK A. NICKEL
REVIEW C. NICKEL
SERIES # 2 OF 2

STATE OF LOUISIANA
CHRISTOPHER J. NICKEL
License No. 30572
PROFESSIONAL ENGINEER
IN
CIVIL ENGINEERING
10/23/2023

APPROVED BY CHIEF ENGINEER:
DATE: 10/26/2023

DRAINAGE STRUCTURES
TYPICAL SECTIONS FOR CROSS DRAINS & SIDE DRAINS

STANDARD PLAN BM-01

DOTD
LOUISIANA DEPARTMENT OF TRANSPORTATION & DEVELOPMENT

PAVEMENT & GEOTECHNICAL SERVICES

GENERAL NOTES:

1) THIS STRUCTURE MEETS ALL DOTD HYDRAULIC PERFORMANCE CRITERIA WHEN USED IN ACCORDANCE WITH THE DOTD HYDRAULICS MANUAL AND ALL DOTD HYDRAULIC DESIGN POLICIES.

2) PROVIDE PRECAST UNITS AS THE LOWER PORTION OF A COMPOSITE STRUCTURE. PROVIDE CAST-IN-PLACE CONCRETE (SEE APPROPRIATE STANDARD PLAN FOR REQUIRED REINFORCING AND DIMENSIONS) FOR THE TOP 1'-6" OF THE STRUCTURE AS FOLLOWS:
   A) CB-01, CB-02, CB-04, CB-05, AND MANHOLES MAY BE FULLY PRECAST IF THE STRUCTURES ARE NOT EXPOSED TO TRAFFIC LOADS; ELEVATIONS MUST BE FIELD VERIFIED PRIOR TO FABRICATION.
   B) CB-06, CB-07, CB-08, AND CB-09 STRUCTURES MUST HAVE THE TOP 18" CAST-IN-PLACE; ELEVATIONS MUST BE FIELD VERIFIED PRIOR TO FABRICATION.

3) DESIGN IS TO BE IN ACCORDANCE WITH THE AASHTO LRFD BRIDGE DESIGN SPECIFICATIONS, EIGHTH EDITION, 2017, AND THE LATEST LOUISIANA STANDARD SPECIFICATIONS FOR ROADS AND BRIDGES.

4) FINISH CAST-IN-PLACE CONCRETE IN ACCORDANCE WITH OTHER STANDARD PLANS AND 805.

5) FORM PIPE OPENINGS ONLY AS REQUIRED FOR INTERSECTING PIPES. PROVIDE OPENING DIMENSIONS TO ACCOMMODATE PIPE DIAMETER AND SKEW ANGLE. PROVIDE OPENING DIMENSION THAT IS 4±1/2 INCH LARGER THAN OUTSIDE PIPE DIMENSION.

6) RESILIENT CONNECTORS OR CONCRETE COLLARS ARE REQUIRED FOR CONNECTIONS OF ALL PIPE SIZES (EXCEPT YARD DRAIN PIPE AND UNDERDRAINS) WITH COST TO BE INCLUDED IN THE COST OF THE PRECAST STRUCTURE.

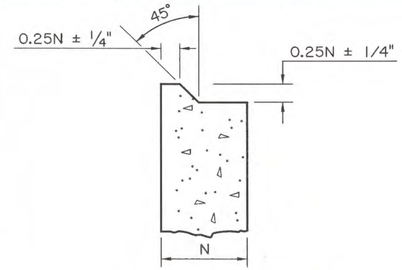

JOINT DETAIL A
PRECAST/PRECAST

1. SEAL AND WRAP JOINT IN ACCORDANCE WITH 702.04.01

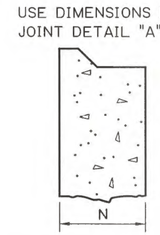

JOINT DETAIL B - OPTION 1
CAST-IN-PLACE/PRECAST

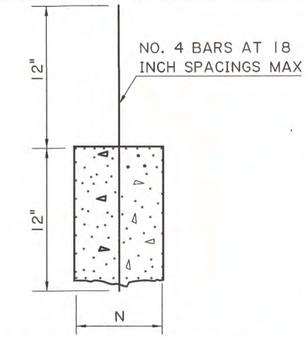

JOINT DETAIL B - OPTION 2
CAST-IN-PLACE/PRECAST

IN OPTIONS 1 AND 2, COAT PRECAST CONCRETE JOINT SURFACE AND A MAXIMUM OF 2 INCHES OF REINFORCING STEEL WITH TYPE V, GRADE 2 OR GRADE 3 EPOXY RESIN CONFORMING TO 1017. APPLY EPOXY RESIN AND PLACE CONCRETE IN ACCORDANCE WITH MANUFACTURER'S RECOMMENDATIONS.

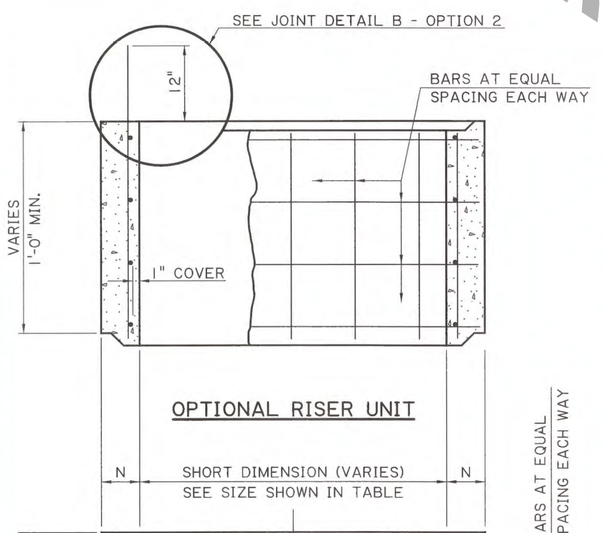

OPTIONAL RISER UNIT

PRECAST UNITS FOR CATCH BASINS & MANHOLES														
MAXIMUM HEIGHT	N	4' MAX. DIMENSION			6' MAX. DIMENSION			8' MAX. DIMENSION			10' MAX. DIMENSION		
		⊙TYPICAL SIZES 3'X3' 4'X4'			⊙TYPICAL SIZES 6'X4' 6'X6'			⊙TYPICAL SIZES 8'X4' 8'X6' 8'X8'			⊙TYPICAL SIZES 10'X4' 10'X6' 10'X8' 10'X10'		
FT.	IN.	BAR SIZE	SPAC.* IN.	As⊠ IN²/FT.	BAR SIZE	SPAC.* IN.	As⊠ IN²/FT.	BAR SIZE	SPAC.* IN.	As⊠ IN²/FT.	BAR SIZE	SPAC.* IN.	As⊠ IN²/FT.
8	4	4	6	0.40									
8	6	4	9	0.27	4	8	0.30	4	5.5	0.44	5	5.5	0.68
14	6	4	9	0.27	4	6	0.40	5	5	0.74	5	3.25	1.14
20	6	4	7	0.34	4	4.5	0.53						

⊙ OTHER SIZES ARE ACCEPTABLE AS LONG AS THE DIMENSIONS DO NOT EXCEED THE MAXIMUM DIMENSIONS.
* BAR SPACING APPLIES TO BOTH DIRECTIONS AND AT ALL LOCATIONS.
⊠ BAR SIZES AND SPACING MAY DIFFER FROM VALUES SHOWN, BUT THE AREA OF STEEL (A_s) SHALL BE EQUAL TO OR GREATER THAN VALUE SHOWN, AND BAR SPACING SHALL NOT EXCEED 1.5 TIMES THE WALL THICKNESS. THE AREA OF STEEL (A_s) MAY BE PROVIDED WITH STEEL DEFORMED WELDED WIRE FABRIC.

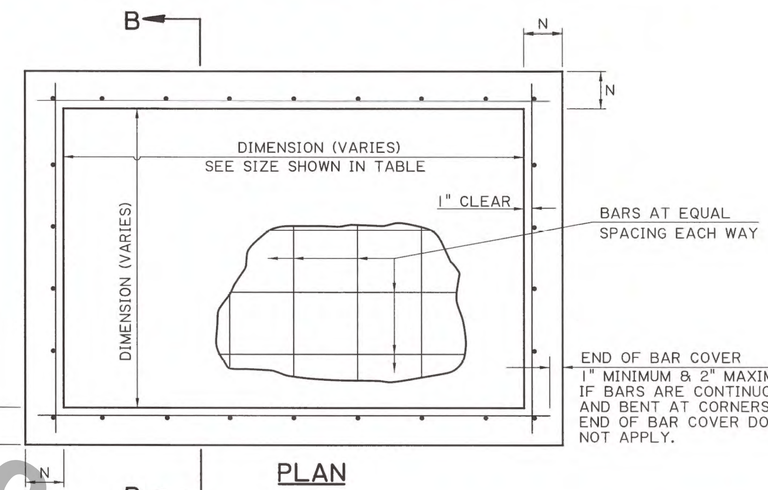

PLAN

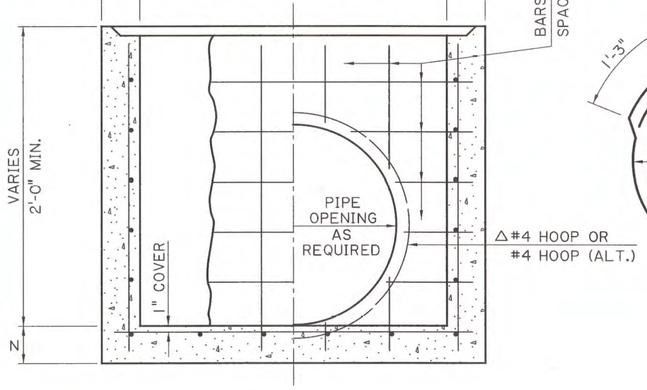

BASE UNIT
SECTION B-B

△ #4 HOOP MAY BE USED WHEN PIPE IS CIRCULAR AND CONNECTS TO THE CATCH BASIN AT +/- 90 (DEGREE) ANGLE.
#4 HOOP (ALT.) SHALL BE USED FOR NON-CIRCULAR (ELLIPTICAL) PIPES AND ALL PIPES THAT ENTER THE CATCH BASIN AT A SKEWED ANGLE.

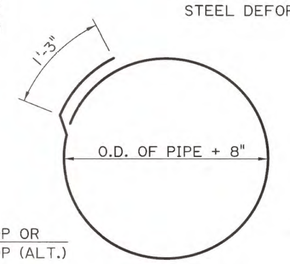

△#4 HOOP

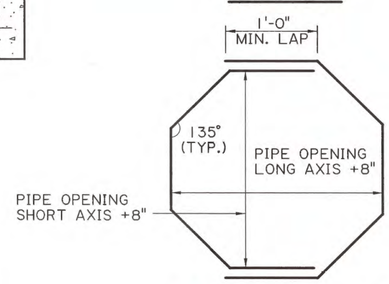

△#4 HOOP (ALT.)

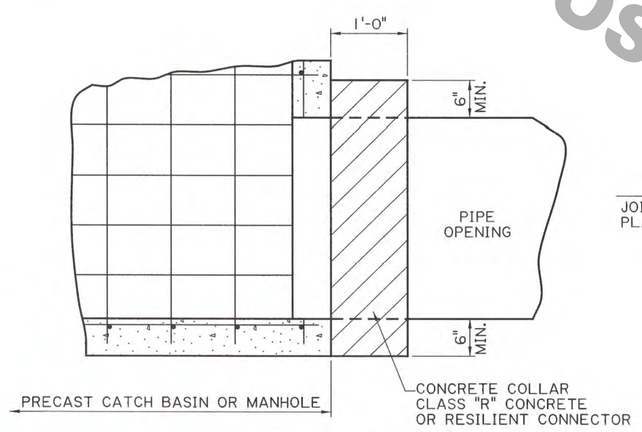

PIPE CONNECTION DETAIL

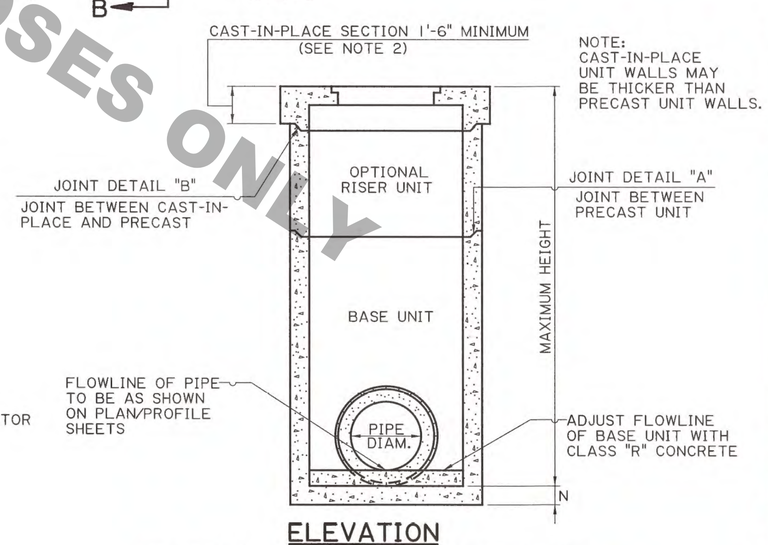

ELEVATION
TYPICAL COMPOSITE STRUCTURE

FOR INFORMATIONAL PURPOSES ONLY

SHEET NUMBER | PARISH | CONTROL SECTION | STATE PROJECT | DESIGN CHECK | DETAIL CHECK | REVIEW | SERIES # 1 OF 1

STATE OF LOUISIANA — J. BRYAN CROUCH, REG. No. 29379, REGISTERED PROFESSIONAL ENGINEER IN MECHANICAL ENGINEERING — 9/28/23 — HYDRAULICS

STATE OF LOUISIANA — XUYONG WANG, REG. No. 32508, REGISTERED PROFESSIONAL ENGINEER IN CIVIL ENGINEERING — 9/28/23 — STRUCTURAL

APPROVED BY CHIEF ENGINEER: DATE: 10-2-2023

PRECAST CATCH BASINS AND MANHOLES

STANDARD PLAN PC-01

DOTD — LOUISIANA DEPARTMENT OF TRANSPORTATION & DEVELOPMENT

HYDRAULICS SECTION

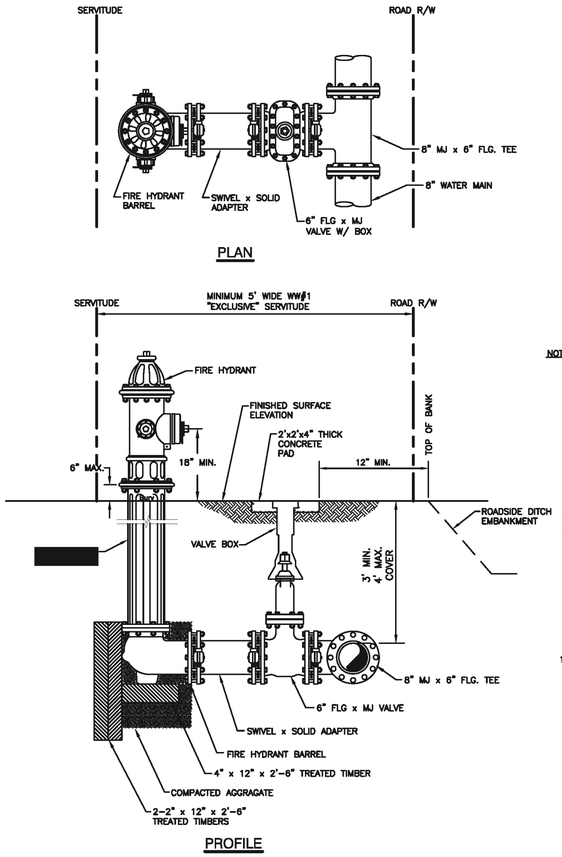

NOTES:

1. FIRE HYDRANT SHALL BE IN ACCORDANCE WITH CONSOLIDATED WATERWORKS DISTRICT NO. 1 AND/ OR ALL APPLICABLE LOCAL FIRE DISTRICT CODES.
2. HYDRANTS SHALL BE COATED FROM THE FACTORY IN ACCORDANCE WITH WATERWORKS DISTRICT NO. 1 SPECIFICATIONS.
3. ALL HYDRANTS SHALL FACE ROADWAY UNLESS SPECIFIED BY OTHER PROJECT ENGINEER.
4. CHECK EACH SURFACE ELEVATION LOCATION TO SET BARREL HEIGHT.
5. ALL HYDRANTS SHALL TO BE SET PLUMB AND LEVEL.
6. PRIOR TO BACKFILL, WRAP FROM VALVE TO HYDRANT WITH 8 MIL. POLYETHYLENE VISQUEEN. PUNCH HOLES IN FILM TO DRAIN GROUND WATER.
7. ALL RODS TO BE STAINLESS STEEL AND CLAMPS TO BE DOUBLE HOT DIPPED GALVANIZED.
8. COMPACTED AGGREGATE TO BE EXTENDED 3 INCHES ABOVE HYDRANT DRAIN HOLE.
9. FOR SHORT SUPPLY PIPES, HYDRANTS SHALL EITHER BE RODDED DIRECTLY TO VALVES, OR USE ANCHOR COUPLINGS.
10. ALL BOLTS SHALL BE EITHER CORTEN OR S316 STAINLESS STEEL. BOLTS FOR FIRE HYDRANT FLANGE CONNECTION SHALL BE S316 S.S.

1 TYPICAL FIRE HYDRANT INSTALLATION

N T S

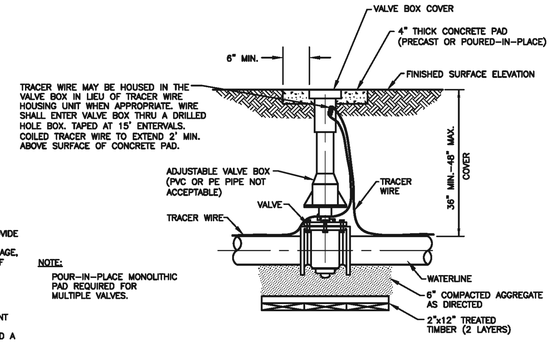

NOTE:

1. NEW TRACER WIRE TO BE RUN ON OUTSIDE OF VALVE BOX.
2. DRILL HOLE ⅜"ø MINIMUM AND 1" ø MAXIMUM IN VALVE BOX AND INSERT TRACER WIRE TO INSIDE OF BOX. PROVIDE A SMOOTH EDGED GROMMET ON THE DRILLED HOLE. TO PREVENT WIRE DAMAGE. HOLE TO BE 2"-4" BELOW BOTTOM OF VALVE PAD AND/OR VALVE COVER.
3. COILED CONTINUOUS TRACER WIRE TO EXTEND 2' MIN. ABOVE SURFACE OF CONCRETE PAD. PROVIDE SUFFICIENT LENGTH OF CONTINUOUS WIRE INSIDE VALVE BOX TO ALLOW WIRE TO EXTEND A MINIMUM OF 2' ABOVE GROUND WHEN NECESSARY.

NOTE:

POUR-IN-PLACE MONOLITHIC PAD REQUIRED FOR MULTIPLE VALVES.

2 TYPICAL VALVE, BOX AND TRACER WIRE INSTALLATION

N T S

GENERAL NOTES:

1. CONTRACTOR SHALL COMPLY WITH THE SPECIFICATIONS REQUIRED BY WATERWORKS DISTRICT NUMBER 1.
2. ALL MATERIALS SHALL BE MANUFACTURED DOMESTICALLY.
3. CONTRACTOR SHALL PROTECT ALL UTILITIES ENCOUNTERED DURING CONSTRUCTION AND SHALL NOTIFY THE RESPECTIVE UTILITY COMPANIES BY NOTIFYING LA ONE CALL AT LEAST 48 HOURS IN ADVANCE PRIOR TO COMMENCING CONSTRUCTION.
4. CONTRACTOR SHALL TAKE ALL PRECAUTIONS NECESSARY TO PROTECT PRIVATE PROPERTY AND TO ALLOW FOR THE PASSAGE OF VEHICLES AND PEDESTRIANS IN DEVELOPED AREAS.
5. ALL EXISTING STRUCTURES DAMAGED OR AFFECTED BY THE SUBDIVISION/ DEVELOPMENT SHALL BE REPLACED OR RESTORED TO THEIR ORIGINAL CONDITION.
6. CONTRACTOR SHALL FIELD VERIFY THE DEPTH OF EXISTING MAINS PRIOR TO ORDERING VALVES TO ASSURE THAT THERE WILL BE SUFFICIENT COVER FOR VALVE BOX.
7. CONTRACTOR SHALL BE RESPONSIBLE FOR LOCATING AND FIELD VERIFYING EXISTING WATER MAINS AND ALL OTHER UTILITIES IN CONFLICT WITH NEW WATER MAINS TO BE INSTALLED.
8. IF ASBESTOS-CEMENT (AC) PIPE IS ENCOUNTERED CONTRACTOR SHALL NOT FURTHER DISTURB NOR EXPOSE THE PIPE. AC PIPE SHALL BE HANDLED IN ACCORDANCE WITH THE DISTRICTS APPROVED RESOLUTION DATED APRIL 18, 2005.
9. ALL PIPE SHALL BE POLYVINYLCHLORIDE (PVC), AWWA C-900; DUCTILE IRON (DI) CLASS 150 OR POLYETHYLENE, (PE) ASTM 3408, SDR11, SERIES 4000. PIPE MATERIAL SHALL BE HOMOGENOUS UNLESS OTHERWISE APPROVED BY THE DISTRICT.
10. ALL FITTINGS SHALL BE EPOXY COATED DUCTILE IRON WITH CEMENT-LINED INTERIOR.
11. ALL BOLTS BELOW GROUND TO BE CORTEN OR 316 STAINLESS STEEL. ALL BOLTS ABOVE GROUND AND FLANGE CONNECTIONS TO BE 316 STAINLESS STEEL. ALL BOLTS TO BE TEE OR HEX HEAD. ANTI-SEIZE COMPOUND IS TO BE USED ON STAINLESS STEEL BOLTS AND NUTS.
12. NO. 10 AWG STRANDED COPPER (BLUE) TRACER WIRE, AND BLUE WARNING TAPE SHALL BE USED. ALL TRACER WIRE SPLICES TO BE CONNECTED WITH DIRECT BORE SPLICE KIT, PART NO. 0544007-09964, AS MANUFACTURED BY 3M CORPORATION, OR APPROVED EQUAL. PROVIDE STRAIN RELIEF BY A SQUARE KNOT WITH TWO OF THE TRACER WIRES AND INSTALLING THE SPLICE KIT ON THE TAG ENDS. TRACER WIRE SHALL BE SECURELY TAPED (DUCT TAPE) TO THE TOP CENTERLINE OF THE WATERLINE AT 15-FOOT INTERVALS.
13. A TRACER WIRE HOUSING UNIT SHALL BE PROVIDED ON THE WATER MAIN BETWEEN VALVES SPACED GREATER THAN 1500-FEET.
14. ALL WATER MAINS SHALL HAVE A MINIMUM OF 36-INCH COVER AND A MAXIMUM OF 48-INCH COVER MEASURED FROM THE FINISHED SURFACE ELEVATION TO THE TOP OF PIPE. A 18-INCH MINIMUM CLEARANCE FROM INVERT TO TOP OF PIPE BELOW ROADSIDE DITCHES AND A 36-INCH MINIMUM BELOW SUBMERGED CROSSINGS, LARGE DITCHES OR CANAL CROSSINGS SHALL BE PROVIDED. BOLTED CONNECTIONS ARE NOT PERMITTED FOR WATER MAIN INSTALLATIONS IF THE DEPTH OF COVER FROM FINISHED SURFACE ELEVATION TO TOP OF PIPE EXCEEDS 4.0-FEET, UNLESS AS OTHERWISE INDICATED AND SPECIFIED ON THE APPROVED CONDITIONAL (PRELIMINARY) PLAN.
15. ALL VALVES AND DUCTILE FITTINGS ARE TO BE RESTRAINED AND WRAPPED WITH 8 MIL POLYURETHANE.
16. ALL DUCTILE IRON (DI) WATER MAINS SHALL HAVE A MINIMUM OF 8 MIL POLYURETHANE ENCASEMENT.
17. ALL PIPE SHALL BE PROPERLY RESTRAINED IN ACCORDANCE WITH THE TABLE INDICATED ON THE APPLICABLE DETAIL OF THESE STANDARD DRAWINGS.
18. ALL FIRE HYDRANTS TO BE PLACED WITHIN THE 5-FOOT WIDE "EXCLUSIVE" WATERWORKS SERVITUDE. VALVES AND HYDRANTS SHALL NOT BE LOCATED WITHIN DITCH OR DITCH EMBANKMENTS. CONCRETE VALVE BOX PAD OR HYDRANT SHALL BE AT LEAST 12-INCHES CLEAR FROM TOP OF DITCH EMBANKMENT.
19. LENGTHS OF PIPE BETWEEN SEPARATE MJ FITTINGS LESS THAN 4-FEET APART SHALL BE RODDED.
20. ALL EXISTING VALVES OR FITTINGS REMOVED ARE TO BE CLEANED AND RETURNED TO THE DISTRICT'S YARD LOCATED AT 8814 MAIN STREET.
21. CONCRETE VALVE BOX PADS SHALL BE 4-INCHES THICK AND SHALL BE RECTANGULAR, SQUARE OR CIRCULAR. VALVE BOX SHALL BE CENTRALLY LOCATED WITHIN THE CONCRETE PAD. MINIMUM DISTANCE BETWEEN EDGE OF CONCRETE AND EDGE OF VALVE BOX SHALL BE 6-INCHES. PADS MAY BE PRE-CAST CONCRETE. PROVIDE A MONOLITHIC, POURED-IN-PLACE PAD WHEN THE CENTERLINE DISTANCE BETWEEN ADJACENT VALVES IS LESS THAN 2-FEET.
22. ALL NEW WATER MAINS ARE TO BE PRESSURE TESTED IN ACCORDANCE WITH THE DISTRICT'S SPECIFICATIONS. PROVIDE 24-HOUR ADVANCE NOTICE.
23. DISINFECTING PROCEDURES FOR WATER MAINS SHALL BE IN ACCORDANCE WITH PART XII, LOUISIANA ADMINISTRATIVE CODE, TITLE 51, AND ANSI/AWWA C651-05 OR LATEST REVISION.
24. APPLICABLE SATISFACTORY HEALTH DEPARTMENT SANITARY TEST RESULTS TO BE FURNISHED TO THE DISTRICT AS A PREREQUISITE FOR FINAL APPROVAL. SPACING BETWEEN SAMPLE POINTS (BAC-T STATIONS) SHALL NOT EXCEED 1,000 LINEAR FEET UNLESS AS OTHERWISE INDICATED AND SPECIFIED ON THE APPROVED CONDITIONAL (PRELIMINARY) PLAN. ALL DEAD END LINES MUST HAVE A SAMPLE POINT. THE LOCATION (AND POINT NUMBER) OF ALL REQUIRED SAMPLE POINTS ARE INDICATED ON THIS APPROVED CONDITIONAL (PRELIMINARY) PLAN.
25. PROVIDE AN APPROVED FLUSHING APPARATUS AT ALL DEAD ENDS AS DESIGNATED BY THE DISTRICT. THE FLUSHING APPARATUS SHALL BE A STANDARD FIRE HYDRANT (SEE DETAIL 1) OR A 2-INCH WET BARREL MODEL VB2000B AS MANUFACTURED BY WATER PLUS CORPORATION (SEE DETAIL 4), OR APPROVED EQUAL. THE 2-INCH WET BARREL FLUSHING APPARATUS SHALL BE HOUSED INSIDE A STANDARD 5 ¼-INCH VALVE BOX WITH COVER SET TO FINISHED SURFACE ELEVATION WITH CONCRETE VALVE PAD.
26. A REPRESENTATIVE OF THE APPLICABLE FIRE DISTRICT MUST BE NOTIFIED AND INVITED TO THE REQUIRED FINAL INSPECTION. PROVIDE 48-HOURS ADVANCE NOTICE.

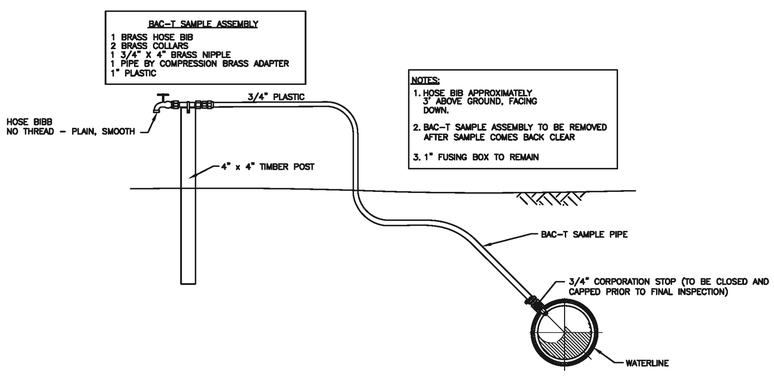

3 BAC-T SAMPLE STATION

(SEE GENERAL NOTE 24)

N T S

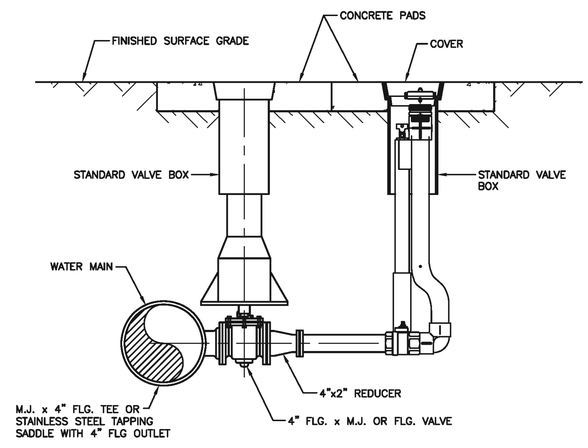

4 FLUSHING APPARATUS

(SEE GENERAL NOTE 25)

N T S

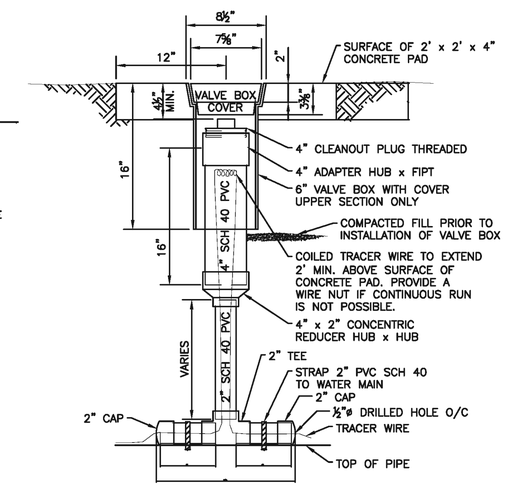

5 TRACER WIRE HOUSING UNIT

(SEE GENERAL NOTE 13)

N T S

CONSOLIDATED WATERWORKS DISTRICT NO. 1
8814 MAIN STREET
P.O. BOX 630
HOUMA, LOUISIANA 70361

STANDARD WATERMAIN DETAILS & GENERAL NOTES

FOR
WATER LINE CONSTRUCTION

DESIGNED BY:	COMPILED BY:	APPROVED BY:

DATE: APRIL, 2010

SCALE: NOT TO SCALE

DATE:
REVISIONS:
REMARKS:
DATE:
REVISIONS:
REMARKS:
FILE: ACAD\DIST\AREA3\2-14B

AREA:

SHEET: 1 OF 4

NOTES:

1. DISTANCES OF RESTRAINTS SHALL BE REQUIRED ON EVERY JOINT(S) ON EACH SIDE OF FITTING, IN ADDITION TO TIMBER BLOCKING. NO CONCRETE BLOCKING IS ALLOWED.
2. PIPE RESTRAINTS REQUIRED INSIDE OF CASING.
3. RESTRAINT SYSTEM:
   EITHER: (A) RODS FOR USE WITH MECHANICAL JOINT FITTINGS – 2 REQUIRED – 5/8" DIA. STAINLESS STEEL FOR 8" PIPE & BELOW
   (B) RETAINER GLANDS: USE EBAA IRON, UNI-FLANGE, OR EQUAL IN COMPLIANCE WITH PIPE MATERIAL USED
4. DUCTILE IRON FITTINGS & ADJOINING PIPE SHALL BE RESTRAINED AS DETAILED & BY MINIMUM LENGTH ON EACH SIDE OF FITTING AS CHARTED BELOW:

NOMINAL PIPE SIZE	11 1/4° BEND	22 1/2° BEND	45° BEND	90° BEND	90° BEND, TEE OR DEAD END
4"	4'	6'	11'	27'	30'
6"	4'	7'	16'	37'	42'
8"	5'	10'	20'	49'	55'
10"	6'	12'	25'	59'	67'
12"	7'	14'	29'	70'	80'
14"	8'	16'	33'	80'	92'
16"	9'	18'	38'	91'	104'
18"	10'	20'	42'	101'	116'
20"	11'	22'	46'	111'	128'

5. FOR REDUCERS, UNEQUAL BRANCH VS. RUN TEES AND VERTICAL OFFSETS RESTRAINING WILL BE CASE SPECIFIC. PROJECT ENGINEER SHALL PROVIDE MINIMUM RESTRAINING FOR THESE SPECIAL CASES.
6. ALL JOINTS THAT FALL WITHIN THE DISTANCES SHOWN MUST BE RESTRAINED. BRANCHES OF TEES & DEAD ENDS TAKE THE SAME VALUE AS 90° BEND.

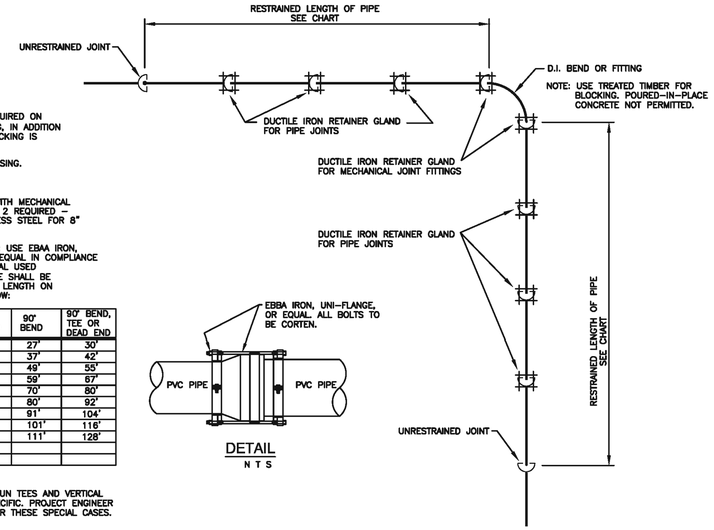

1 RESTRAINED PIPE AND FITTINGS

N T S

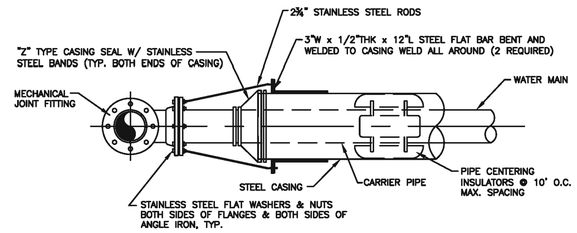

2 RESTRAINED TO STEEL CASING PIPE

N T S

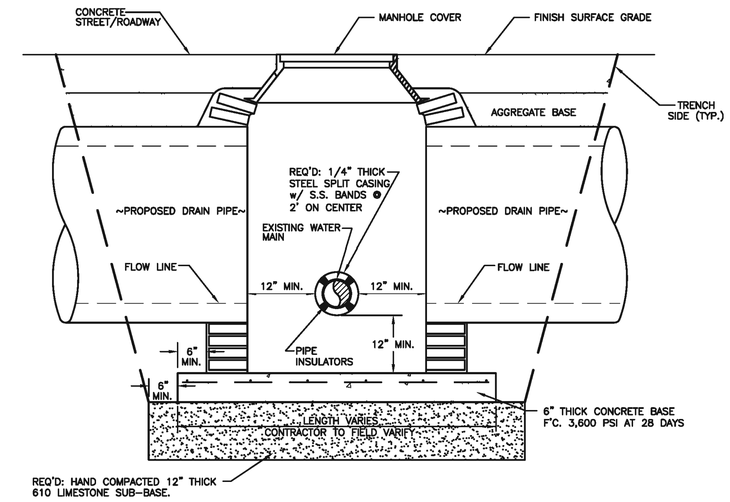

REQ'D:
CONFLICT MANHOLE COVER AND FRAME TO BE MACHINE SEATED HEAVY TRAFFIC CONFORMING TO VULCAN FOUNDRY PATTERN NO. VM-1, REFERENCE S & WB D-871/LDH RCB-13 APPROX. WT. 440 LBS. COVERS SHALL BE EMBOSSED WITH THE LEGEND "DRAIN" USING STD. 4" HIGH RAISED FACE LETTERS.
COST FOR GRATE & FRAME TO BE INCLUDED IN UNIT COST FOR CONFLICT MANHOLE. NO DIRECT PAYMENT.

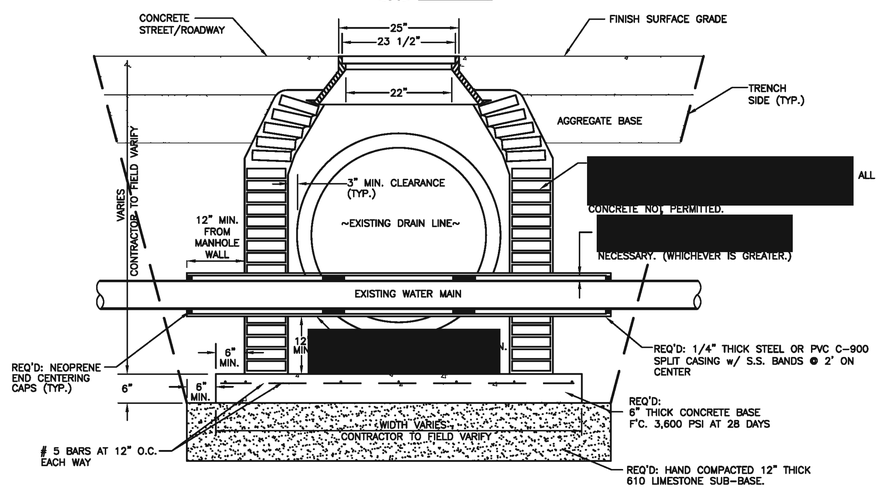

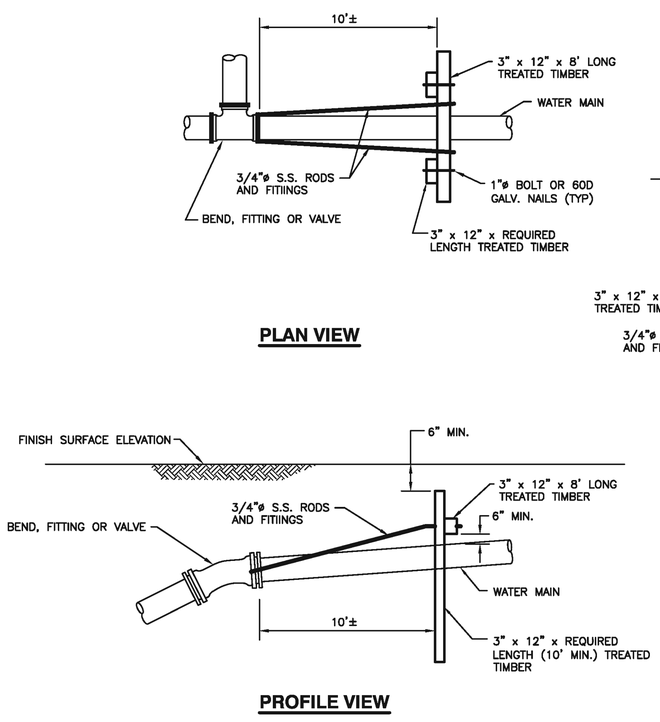

3 DEADMAN DETAILS

N T S

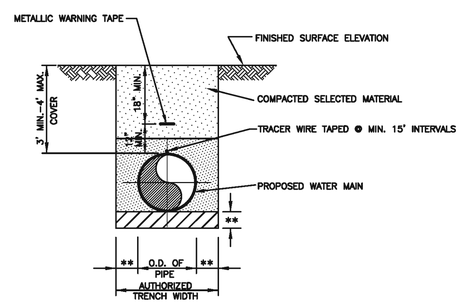

**NOTE:
AGGREGATE FOUNDATION AND ADDED TRENCH WIDTH MAYBE REQUIRED BELOW AND/OR AROUND WATERLINE IN SPECIAL CIRCUMSTANCES OR UNSTABLE SOIL CONDITIONS AS DIRECTED BY PROJECT ENGINEER

RIVERSAND OR AGGREAGTE REQUIRED UNDER IMPROVED OR HARD SURFACE. SEE DETAIL 4, SHEET 3

4 TYPICAL WATERLINE TRENCH SECTION

N T S

5 CONFLICT MANHOLE DETAIL FOR EXISTING WATER MAINS

N T S

CONSOLIDATED WATERWORKS DISTRICT NO. 1
8814 MAIN STREET
P.O. BOX 630
HOUMA, LOUISIANA 70361

STANDARD WATERMAIN DETAILS & GENERAL NOTES

FOR
WATER LINE CONSTRUCTION

DESIGNED BY:	COMPILED BY:	APPROVED BY:

DATE: APRIL, 2010

SCALE: NOT TO SCALE

DATE:
REVISIONS:
REMARKS:
DATE:
REVISIONS:
REMARKS:
FILE: ACAD\DIST\AREA3\2-14B

AREA:

SHEET: 2 OF 4

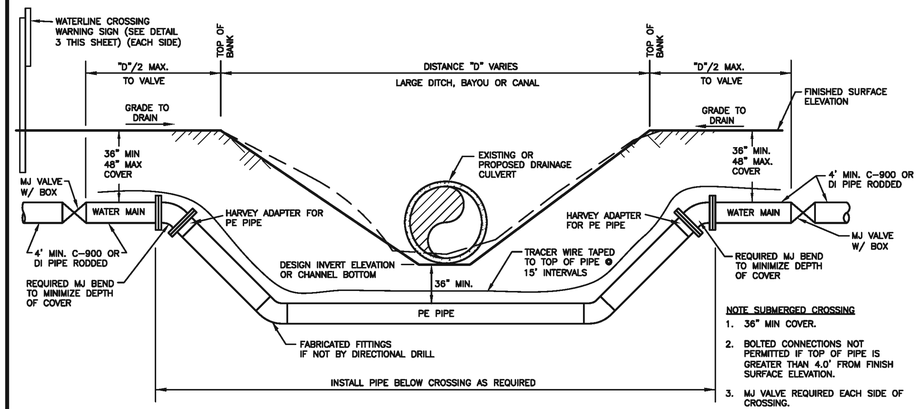

1 TYPICAL LARGE DITCH OR SUBMERGED CANAL OR BAYOU CROSSING BY DIRECTIONAL DRILL OR OPEN CUT METHOD

N T S

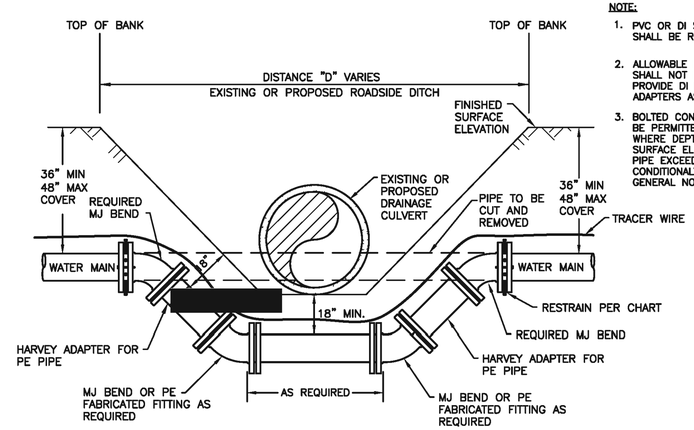

NOTE:

1. PVC OR DI SPOOLS 4' OR LESS SHALL BE RODDED
2. ALLOWABLE FLEX FOR PE PIPE SHALL NOT BE EXCEEDED. PROVIDE DI BENDS AND HARVEY ADAPTERS AS REQUIRED
3. BOLTED CONNECTED SHALL NOT BE PERMITTED FOR INSTALLATION WHERE DEPTH FROM FINISHED SURFACE ELEVATION TO TOP OF PIPE EXCEEDS 4.0 FEET UNLESS CONDITIONALY APPROVED. SEE GENERAL NOTE 14 ON SHEET 1.

2 TYPICAL WATERLINE ROADSIDE DITCH CROSSING

N T S

NOTE

1) PROVIDE NEOPRENE SPACERS BETWEEN ALL DISSIMILAR MATERIALS.
2) ONE SIGN ON EACH SIDE ON CANAL BANK. TWO REQUIRED

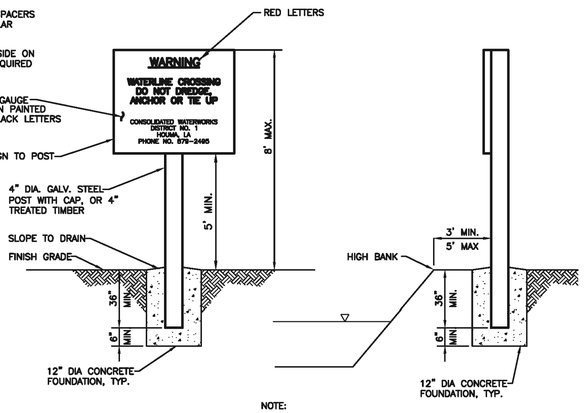

3 WATERLINE CROSSING WARNING SIGN

N T S

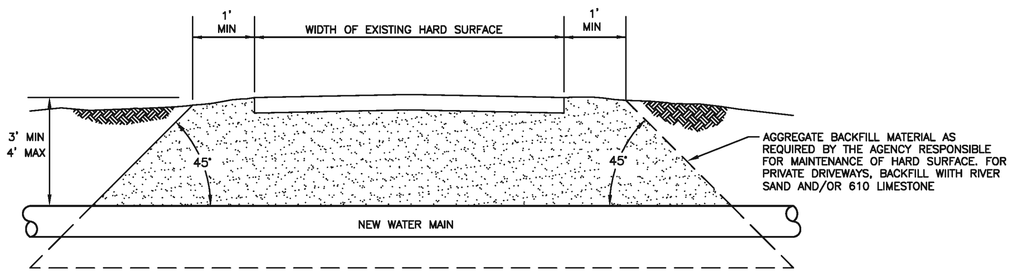

NOTE: ALL AGGREGATE BACKFILL SHALL BE COMPACTED TO A MINIMUM 95% OF MAXIMUM DRY DENSITY AT OPTIMUM MOISTURE CONTENT IN ACCORDANCE WITH ASTM NO. 698.

4 TYPICAL OPEN-CUT INSTALLATION ACROSS EXISTING HARD SURFACE

N T S

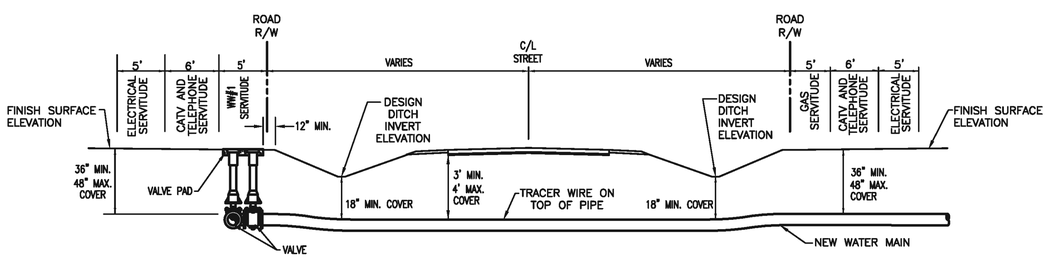

NOTE:

1. EDGE OF CONCRETE VALVE BOX PAD SHALL BE A MIN. OF 12" FROM TOP OF DITCH EMBANKMENT.
2. ALL SERVITUDE SHALL BE IN ACCORDANCE WITH SUBDIVISION PLAN APPROVAL AND TERREBONNE PLANNING COMMISSION.

5 TYPICAL STREET OR ROAD CROSSING

N T S

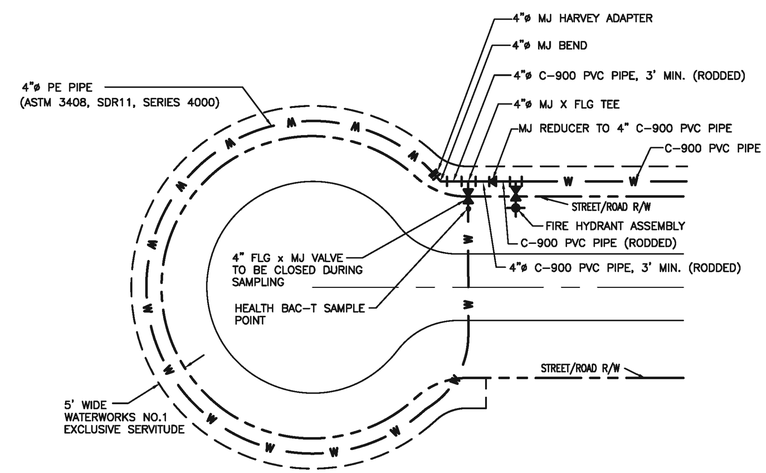

6 TYPICAL CUL-DE-SAC

N T S

CONSOLIDATED WATERWORKS DISTRICT NO. 1 8814 MAIN STREET P.O. BOX 630 HOUMA, LOUISIANA 70361	STANDARD WATERMAIN DETAILS & GENERAL NOTES FOR WATER LINE CONSTRUCTION	DATE: APRIL, 2010	DATE: REVISIONS: REMARKS:	AREA:	
		SCALE: NOT TO SCALE	DATE: REVISIONS: REMARKS:	SHEET: 3 OF 4	
	DESIGNED BY: / COMPILED BY: / APPROVED BY:		FILE: ACAD\DIST\AREA3\2-14B		